TECHNICAL DOCUMENTATION

EasyBus

Control and monitoring system for control technology products of TGA

SCHAKO KG
Steigstrasse 25-27
D-78600 Kolbingen

Phone +49 (0) 7463-980-0
Fax +49 (0) 7463-980-200
schako.com | info@schako.de

Contents

INTRODUCTION

Digitalisation is no longer just a trend. The strive for ever-increasing digitalisation of processes in building automation calls for systems that can manage the digital transformation in the area of technical building equipment efficiently and at low cost. With the EASY control and monitoring system, SCHAKO offers you an ideal system to meet these requirements.

According to leaflet VDS 2298, the control of the ventilation and air-conditioning systems must be adapted to the respective areas that are partitioned in terms of fire protection and set up for the case of fire in such a way that fire dampers can be triggered selectively. The leaflet also recommends that all fire dampers in the area affected by the fire can be automatically switched off immediately by the ventilation system for the area affected by the fire (exception: ventilation systems of the escape routes). Circulation systems must be immediately switched to the "exit air" operating mode to prevent smoke from being distributed in the building as a result of the fans running on. With the EASY control and monitoring system, SCHAKO aims to implement these and other requirements reliably and in a cost-effective manner in building automation.

Prevention instead of reaction, minimising fire loads.
The German Association of Property Insurers (VDS) mentions in the VDS2025-2008-01 guideline for damage prevention that insufficient heat dissipation caused by accumulations of pipes is one of the most common causes of fire starting or spreading in pipe systems.
Thanks to the use of PLC technology (Power Line Carrier), the EASY control and monitoring system from SCHAKO requires only one cable for power supply and communication, which means that up to 80% of the cables required for technical building equipment can be omitted compared to conventional installation / cable routing to the components to be monitored and controlled. This not only significantly reduces the costs of installation, but also minimises the fire load in the building.

Building sustainably and thus conserving resources.
Resource-saving building is the order of the day. In view of limited resources, the economical and sensible use of energy and raw materials is one of the most important challenges of the 21st century. Those who use materials efficiently and conserve resources when building do a good thing for the climate, save money and can inspire customers.

Saving energy does not start with the operation of a system. Considerable energy and raw material savings can already be made during production and manufacturing. For example, the EASY control and monitoring system from SCHAKO can save up to 40% of CO_2 emissions compared to similar applications already in the production chain due to the low material requirements of the system which is ready-to-operate once it is installed. During operation, savings in energy / operating costs of well over 30% can be achieved, depending on the constellation of the system.

From the point of view of owners and investors, time spent on construction is unprofitable, which is why the construction industry is striving to complete projects in an even shorter period of time. The Easy control and monitoring system from SCHAKO, with its modular design and simple installation, offers an ideal solution to significantly minimise installation times in the area of technical building equipment compared to conventional systems. It is easy to design already at the planning stage, as neither decentralised power supplies nor signal amplifiers or the like are required. With the only criterion to be met – 128 users for 1000 metres of cable length – complex "if-then" calculations for line lengths, decentralised power supplies and signal amplifiers are no longer necessary.

FIELD OF APPLICATION

The EasyBus system from SCHAKO is a real all-rounder that can not only monitor and control safety-relevant scenarios in terms of fire protection, but also enables the use of complex ventilation and air conditioning systems.

The EasyBus system from SCHAKO makes it possible to control and monitor almost all components of technical building equipment and to provide them with the necessary supply voltage. Almost all TGA modules that have digital or analogue inputs or outputs can be integrated into the EasyBus system.
It is also possible to monitor all integrated components and to generate long-term trends.

A significant advantage of the EasyBus system from SCHAKO is that components from the different subsections of the technical building equipment can be operated together on one and the same bus line. It is not necessary to install several systems for the individual devices. Fire protection equipment, for example, can be monitored and controlled on the same bus line as volumetric flow controllers, valves, sensors, etc.

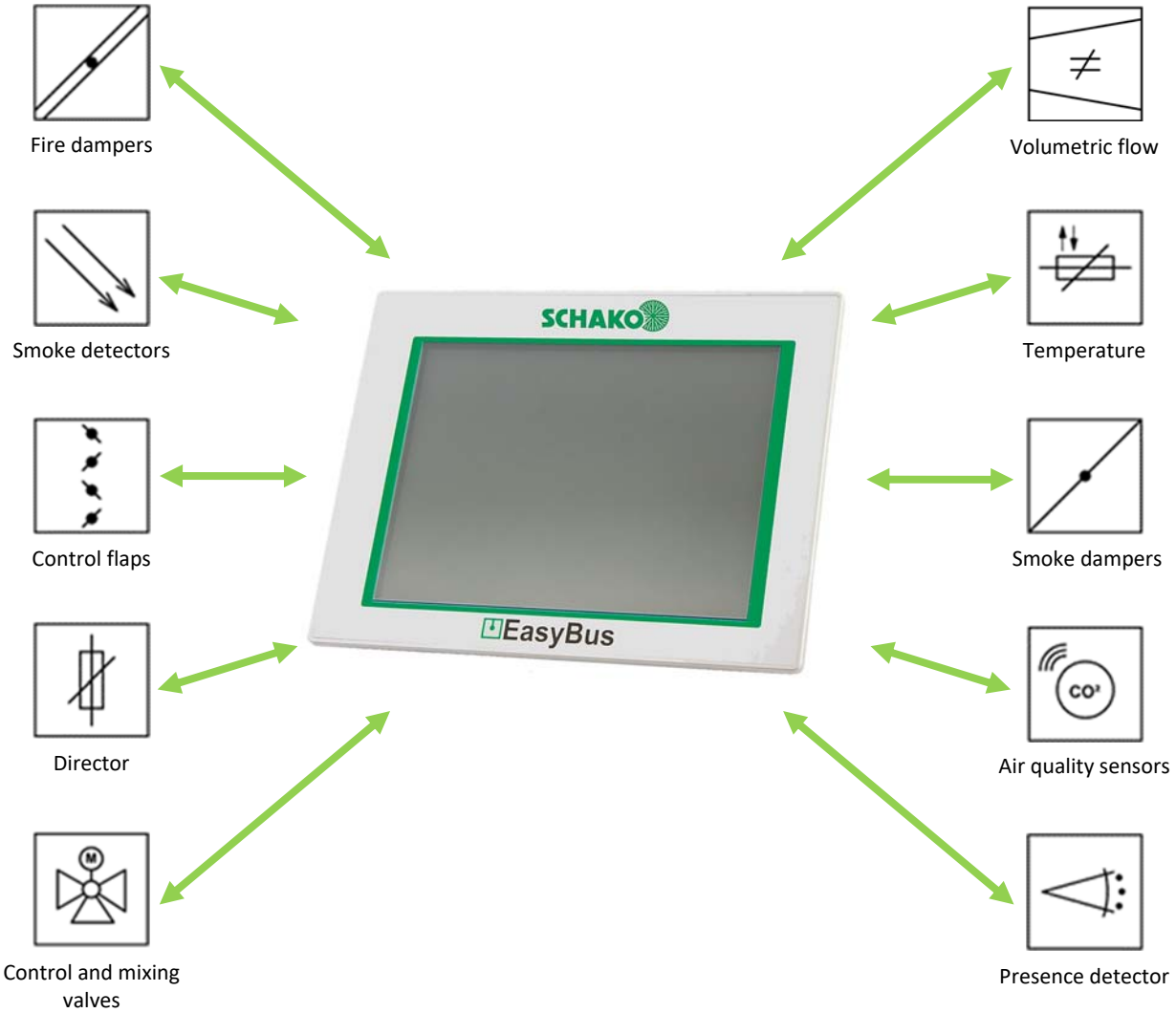

Excerpt from the fields of application

- Both mechanical fire dampers and motorised fire dampers with 24 V DC and / or 230 V AC drives can be monitored, controlled and visualised. The EasyBus system can store any number and type of function matrices. Using smoke detectors integrated into the system, for example smoke switches type RMSII-L, or networking with a fire alarm system, a wide variety of scenarios for fire and smoke gas containment can be automated.
- Smoke extraction dampers and smoke protection dampers can be controlled and monitored via the EasyBus system as well as fire protection equipment. The great advantage here, as with all the actuators and sensors integrated into the system, is that both the transmission of signals and the power supply to the actuators take place via just one line. This saves considerable installation costs compared to a conventional F30 or F90 installation. However, the design of the installation in terms of functional integrity must be checked in advance, depending on national or country regulations. But of course, EasyBus field installation is also possible in a wide variety of functional integrity classes.
- Energy control of the air change rates in parts of the building or individual rooms can be implemented easily and at low cost using the EasyBus system. Two electric volumetric flow controllers can be integrated into the system via the Easy field module type EasyF-V01. Furthermore, the EasyF-V01 module has four digital / analogue inputs via which, for example CO_2 sensors, presence detectors, etc. can be integrated into the EasyBus system. The EasyBus system enables need-oriented control of the respective air change rate via intelligent networking of the sensors and actuators (volumetric flow controllers). Of course, several sensors can also be cascaded for control.
- Temperature and climate control as well as control of the air change rate are possible via the Easy field module type EasyF-V01. The EasyF-V01 makes it possible to integrate two valves, for example for heating and cooling, into the EasyBus system. Likewise, multi-way valves, for example 6-way valves, can be integrated into the system. The four sensor inputs on the Easy field module can be used for example to integrate setpoint and actual value transmitters. Thus, the complete temperature control of a room can be managed with only one field module.
- The EasyBus system features an open, web-based visualisation system that makes it possible to optimally adapt the monitoring of all integrated monitoring, regulation and control units to the operator requirements. It is possible to divide the individual visualisation and control functions into up to 16 password-protected access levels. The EasyBus system also provides the option of recording long-term trends, for example to determine energy consumption.
- Support via remote maintenance tool. Via the remote maintenance tool EasyS-WR1, the EasyBus system provides the option of remote access, for instance to carry out low-cost maintenance. As communication with the remote maintenance tool EasyS-WR1 is established via the mobile network, no integration in the existing building network is required. Only a sufficient signal strength of the mobile network must be ensured.

Of course, a wide spectrum of applications can be combined as desired to create the highest level of functionality, comfort, cost efficiency and safety.

FIELDBUS TOPOLOGY

The EasyBus system from SCHAKO ensures the maximum reduction in installation material and effort. Thanks to the communication protocol, which is based on the PLC technology (Power Line Carrier) already developed in 1950, it does not require any further communication or voltage-carrying lines. The complete network installation is carried out using commercially available, unshielded or twisted 230 V AC cable. The network also includes the 230 V AC power supply and communication with the field users.
The control and monitoring system EasyBus from SCHAKO enables ideal adaptation to any building structure and task thanks to its modular design in combination with the open bus topology.
Even with larger systems or cable lengths, there is no need for signal amplifiers (repeaters) or decentralised voltage feeds.

Thanks to the open fieldbus topology, which is not bound to any complex criteria, the field installation can be ideally adapted to the respective building, especially in the case of renovations. Only the upper limit of a maximum of 1000 metres of cable length or 128 field users per bus line must be observed. The different fieldbus modules (EasyF) can be mixed as desired on one bus line, so that, for example fire dampers, volumetric flow controllers, etc. can be monitored and controlled on one and the same bus line without the need to lay separate lines for the different devices. Thanks to intelligent data management, it is possible to form two different groups of connected fieldbus users (EasyF) on the control unit (EasyS-H01) and to set different priorities with regard to the communication speed.

Example of installation in line

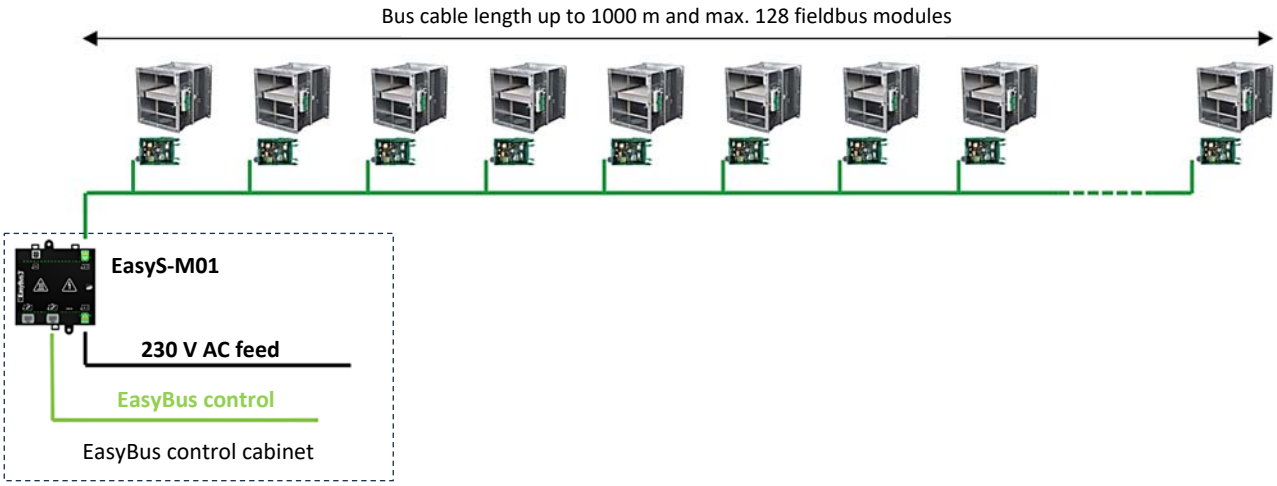

Example of installation in open bus topology

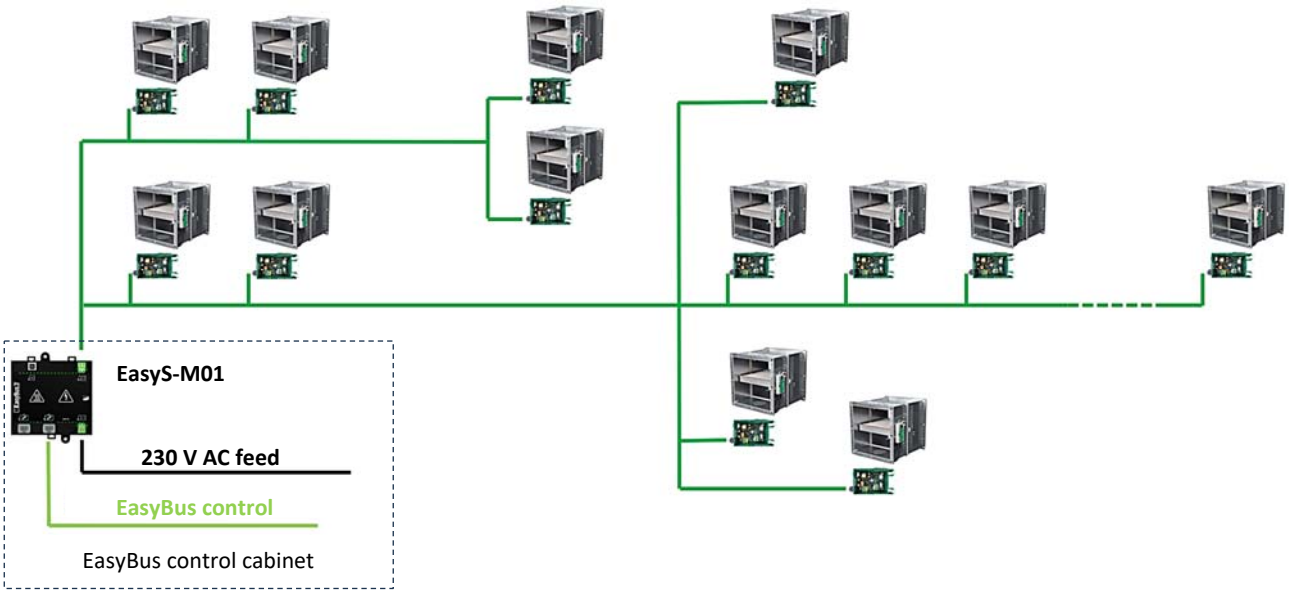

PROPERTIES OF EASYBUS

Up to 128 EasyBus field modules (EasyF-xxx) can be connected per master unit (EasyS-M01). The total length per master is limited to 1000 m. The regulations according to DIN VDE 0100-430: Installation of low-voltage systems – Part 4-43: Protective measures – Protection against overvoltage must be checked by the system operator on site and adjusted in line with local conditions. The field module is mounted at a maximum distance of 80 cm from the respective actuator / sensor, allowing the connecting cable of the actuator / sensor to be connected directly to the module without requiring any further clamping point. Up to three master devices can be linked to each other via the evaluation unit (EasyS-H01). Furthermore, two evaluation units (EasyS-H01) can be linked with each other via a controller (EasyS-C90 / -C96).

Depending on the type of EasyBus users and the complexity of the function programming, the maximum number of field components per controller (EasyS-C90 / -C96) may be reduced or a more powerful controller may be required.

The modules and their connected actuators / sensors are supplied with power directly by the 230 V AC EasyBus network. Data is transmitted directly from the Easy master to the 230 V AC EasyBus network.

For wiring, it is recommended using a flat cable system, which minimises the installation effort. In the flat cable system, all three conductors are contacted automatically simultaneously, without using tools. This allows quick, simple and almost error-free wiring. Wiring with commercially available round cable (for example, NYM or the like) is possible at any time.

The master unit (EasyS-M01) has an integrated line filter that decouples the EasyBus network from the low-voltage network of the power supply company and vice versa (signal damping in both directions).

Advantages of EasyBus

- low-cost and easy to implement
- safe and reliable
- customisation possible
- flexible extension
- complementary to other system protocols
- efficient flat cable wiring
- easy and error-free to plan, execute and test
- customised topology possible (e.g., star, tree or combined)

Data transmission by Powerline

EasyBus utilises data transmission developed in 1950 via an electric power line as a low-cost alternative to traditional wiring. Originally, it was desired to use this type communication for public lighting, in order to be able to switch lighting on and off according to demand without an additional control line.
The EasyBus network uses this reliable type of data transmission to reduce the complete field installation to one cable for power supply and data transmission.

NETWORK ASSEMBLY

The EasyBus network contains different types of modules and components:

- modules mounted in the field (field modules or F modules)
- components installed in the switch cabinet (S modules)
- cables and accessories (Z components)

In building automation, a large number of sensors and actuators are used that regulate and control, among other things, heaters, ventilation and light control.
Control of these automated functions is effected via logic programmable controls (PLC), which can be connected to a bus system.
In the EasyBus system, the components are connected directly to the EasyBus network via a module. This produces a network structure in which all sensors and actuators are connected in parallel to a central line. Both the command signals and the supply voltage are transmitted through this central line.
The modules can be connected to the central bus line in a star, tree or combined network topology. Care must be taken that no ring is formed by the assembled network topology.

The easy installation minimises costs. Another advantage is the minimum cable requirement compared to a conventional installation. As a result, the fire load in the building is substantially reduced.

As standard, the EasyBus system is used in connection with a PLC. The programming language required for this is worldwide standardised to IEC 61131-3.

Its modular design gives the system a clearer structure, allowing errors or faults to be localised very quickly and easily.

EASY NETWORK

An EasyBus network always consists of at least three components:

- Field module (e.g. EasyF-B01, -B11, -V01, etc.)
- Master unit (EasyS-M01)
- Evaluation unit (EasyS-H01)

Even with the minimum system configuration (without EasyS-C90 / -C96), it is possible to monitor and control motorised fire dampers with 24 V DC or 230 V AC drives. However, a controller (-C90 or -C96) can be added later at any time.

An EasyBus network that is only used to control and monitor motorised fire dampers with 24 V DC or 230 V AC drives can have the following maximum configuration:

- one evaluation unit (EasyS-H01) to which up to three master units (EasyS-M01) can be assigned
- a maximum of three master units (EasyS-M01), each with a fieldbus line of max. 1000 m cable length
- a maximum of 384 field modules (EasyF-B01 or EasyF-B11) which are distributed to the three master units (EasyS-M01) (max. 3x128 field modules)

Example of an EasyBus network exclusively for 24 V DC and / or 230 V AC drives

To avoid communication problems between the individual fieldbus lines, a minimum distance of 5 cm must be maintained!
The maximum distance between the evaluation unit EasyS-H01 and the most distant master EasyS-M01 must not exceed 1000 m!

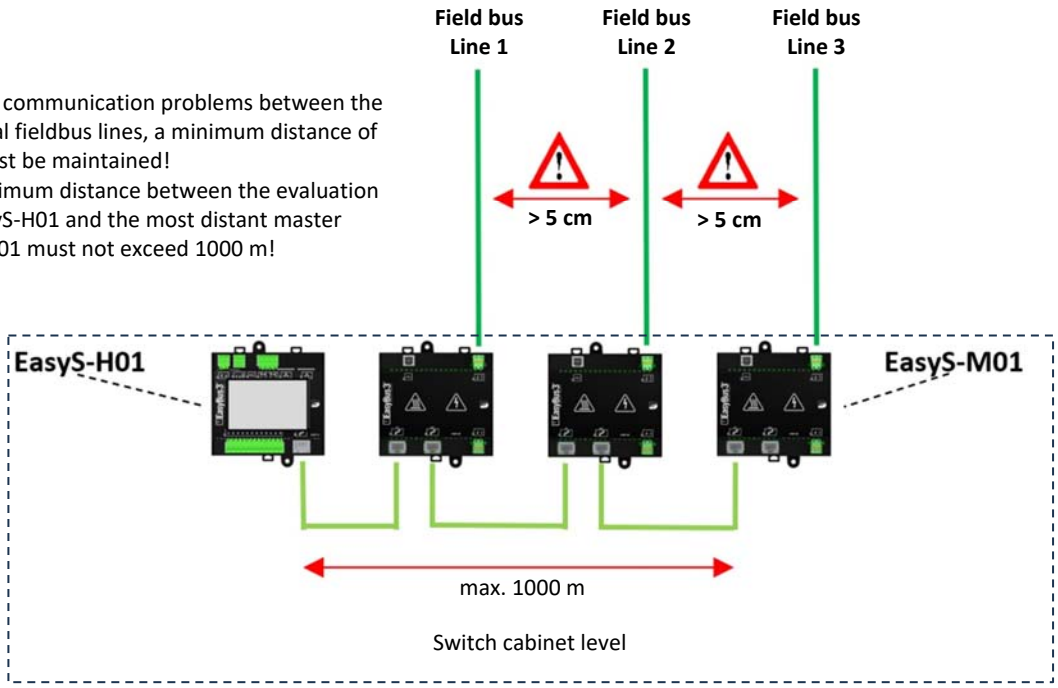

Example of an EasyBus network (maximum configuration)

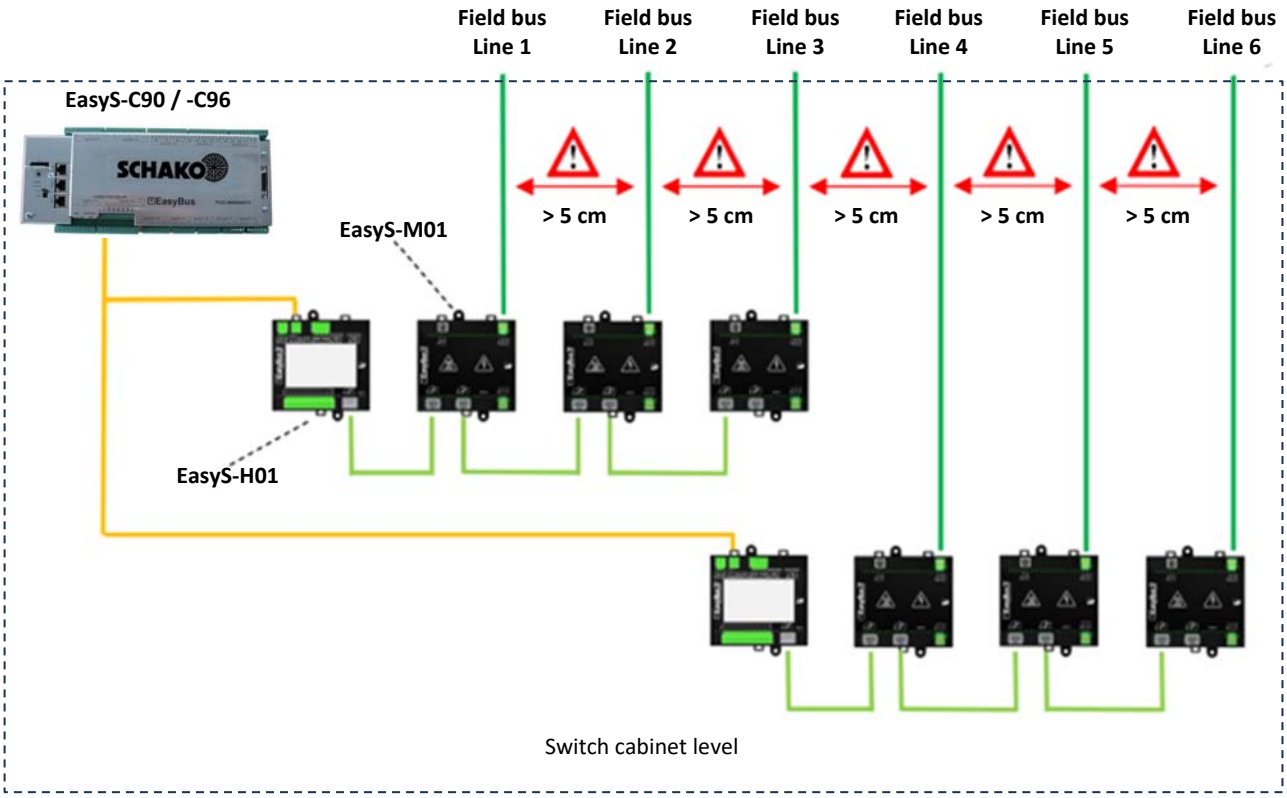

Summary

If, in addition to 24 V DC and / or 230 V AC drives, other actuators / sensors are to be integrated into the EasyBus network, an additional controller (EasyS-C90 /-C96) is required. In this constellation, consisting of at least one controller (EasyS-C90 /-C96) + at least one evaluation unit (EasyS-H01) + at least one master unit (EasyS-M01), all field components from the Easy portfolio can be used. Using a controller (EasyS-C90 /-C96), it is possible to set up an EasyBus network for up to six bus lines, each with 1000 metres of cable length and up to 128 fieldbus modules. If this network size with a total of up to 6000 metres of cable length and a maximum of 768 field modules (EasyF-xxx) is not sufficient, it is possible to set up a second network and network the two controllers (EasyS-C90 / -C96) with each other.
This makes it possible to build up an overall network of almost unlimited size.

Network fuse protection

When installing and selecting safety devices for live lines, it is mandatory to comply with the regulations of DIN VDE 0100. The exact fuse protection of the individual fieldbus lines must be determined by the installing company.
As standard, SCHAKO uses circuit breakers with the tripping characteristic C13A in the preassembled switch cabinets. In addition, a fault-current circuit breaker 16 A 30 mA is connected downstream of the master unit in the switch cabinet for each fieldbus line.
If a preassembled switch cabinet (EasyS-Wxx or EasyS-Axx) from SCHAKO is used, the supply line must be designed as three-phase AC voltage with a fuse protection of at least 20 A.
The installing company is responsible for supervision, authorisation and qualification of the installing personnel. SCHAKO does not accept any warranty / liability for personal injury or damage to property caused by improper use of the EasyBus components.

Example of fuse protection for the mains power supplies

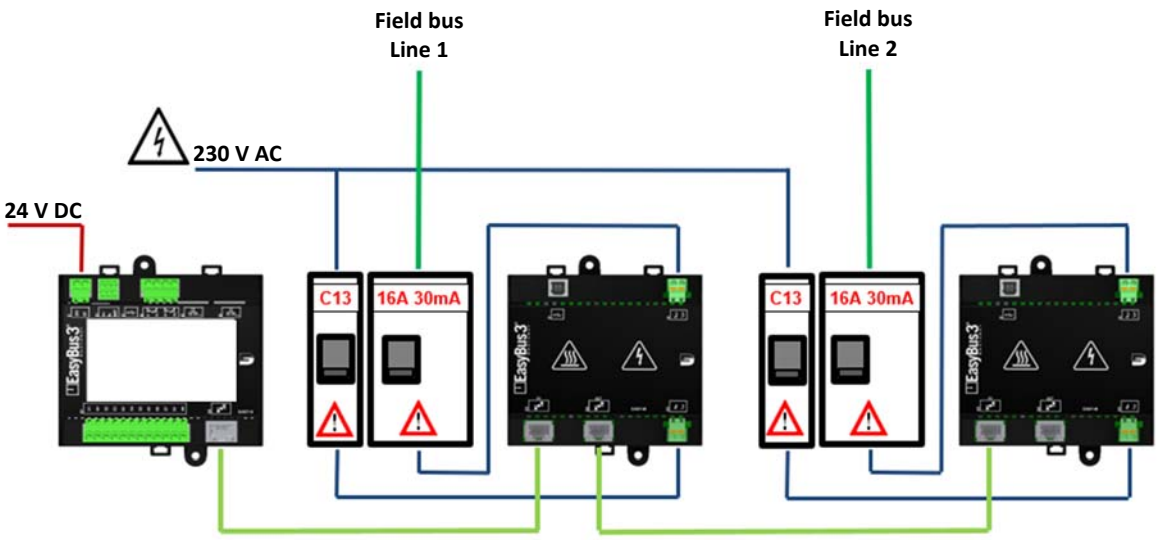

INSTALLATION

The EasyBus network can be designed either conventionally or with a flat cable system.

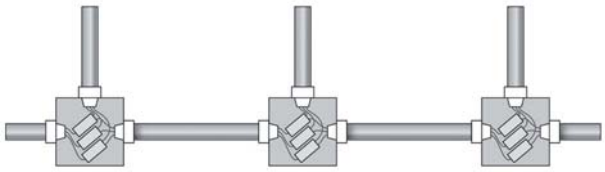

Figure 1: Conventional wiring
Source: Wörtz System Catalogue

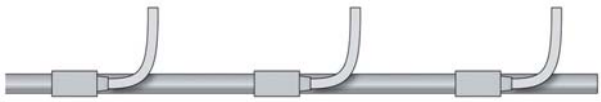

Figure 2: Wiring via flat cable system
Source: Wörtz System Catalogue

The advantages of the flat cable system are quick and simultaneous contacting of the three conductors without requiring tools. This reduces the risk of clamping errors to an absolute minimum.

The following figure shows the principle of this contact technology.

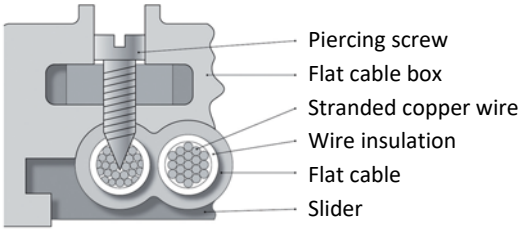

Source: Wörtz System Catalogue

In place of the screw, penetrometers can also be used to establish contact with the conductor. The principle is the same: a screw or knife penetrates the insulation of the cable and enters the stranded wire. In doing so, the stranded wires make contact with the screw or knife over a large surface area.

SYSTEM OVERVIEW

Topology		star, tree or combination
Bus / control line		unshielded 3-wire cable (min. 2.5 mm²)
Fuse protection		circuit breaker C13 (installation-dependent) fault-current circuit breaker 16 A 30 mA
Max. cable length		1000 m (installation-dependent)
Voltage type		230 V AC 50Hz
Max. number of	modules	128 per master unit
	Master	3 per evaluation unit
	evaluation units	2 per CPU (EasyS-C90 /-C96)
Cycle time		(n+1) *40 ms (n: number of modules)
Standard actuators / sensors		-- 24 V DC /230 V AC motorised drives -- steadily regulating drives -- Smoke detectors -- digital or analogue inputs / outputs -- active sensors -- Radio limit switch (other actuators available upon request if necessary)

OVERVIEW OF THE COMPONENTS

FIELD BUS

Type	Description	Function
EasyF-B01	Coupling module for 24 V DC drives with AMP plug	Control of a 24 V DC drive and detection of the end positions (module addressing via RFID)
EasyF-B11	Coupling module for 230 V AC drives	Control of a 230 V AC drive and detection of the end positions (module addressing via RFID)
EasyF-V01	Universal closed-circuit and open-circuit control module DC	Closed-circuit and open-circuit control of steadily regulating DC drives and detection of active and passive sensors
EasyF-VAC	Analogue closed-circuit and open-circuit control module AC	Closed-circuit and open-circuit control of steadily regulating AC drives
EasyF-VMP	Analogue closed-circuit and open-circuit control module	Closed-circuit and open-circuit control of steadily regulating MP drives
EasyF-RMM	Smoke detector module	Monitoring and evaluation of smoke detectors type RMS
EasyF-IOM	Input / output module	Integration of four digital inputs and switching of four digital outputs
EasyF-I8M	Input module	Integration of eight digital inputs

SWITCH CABINET

Type	Description	Function
EasyS-C96	CPU “Central Processing Unit“	Central processing unit which evaluates the received data, processes the function matrix and sends the respective signals to the assigned components
EasyS-H01	Evaluation unit	Communication gateway between the CPU (EasyS-C96) and the Easybus network. In networks consisting exclusively of EasyF-B01 or EasyF-ADC, the EasyS-H01 can be used as the central control unit
EasyS-M01	Master unit	Power supply and PLS communication with the field modules (max. 128 units of a fieldbus line)
EasyS-P3A	Power supply unit 24 V DC	24 V DC power supply for the CPU (EasyS-C96), evaluation unit (EasyS-H01), switch (EasyS-SW5) and touch monitor (EasyS-TP1)
EasyS-SW5	5-port switch	interface -- between the CPU (EasyS-C96) and the touch panel (EasyS-TP1) -- for networking several CPUs (EasyS-C96)
EasyS-TP1	Touch monitor	Monitor for visualisation and operation of the system components
EasyS-R01	Mobile wireless router	Remote maintenance tool for carrying out low-cost maintenance and support activities

ACCESSORIES

Type	Description	Function
EasyZ-FKP	Flat cable	For low-cost and quick installation of the fieldbus lines
EasyZ-FKH	Flat cable (halogen-free)	For low-cost and quick installation of the fieldbus lines (halogen-free)
EasyZ-ESD	Feed socket	Is used to create branches from the flat cable or as a transition from a flat cable to a normal round cable
EasyZ-KST	Cable end piece	Is attached to each cable end to ensure contact protection between the wires
EasyZ-ASD	Connection socket	For quick and low-cost connection of the field components to the flat cable

EasyF-B01 (motor control module 24 V DC)

The EasyF-B01 module is used for monitoring and controlling a 24 V DC drive, for example of a fire protection or smoke extraction damper. In addition, the EasyF-B01 has the option of integrating a smoke switch.

The motor control module EasyF-B01 is the successor module of the EasyF-ADC, which will replace the EasyF-ADC in the medium term due to further technical developments. The EasyF-B01 is compatible in all respects with its predecessor, the EasyF-ADC. As a result of further technical development, the EasyF-B01 is characterised by even simpler installation and addressing of the field level and is also equipped with additional functions that make the overall system even more user-friendly.

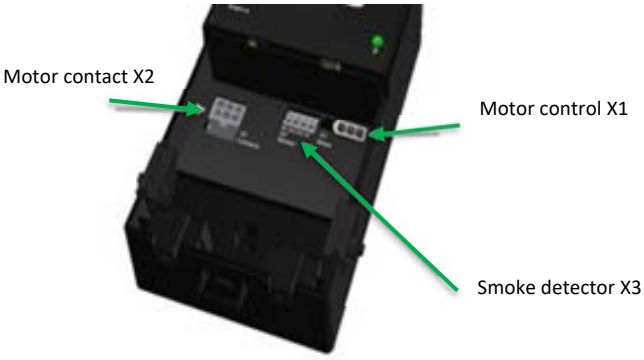

Connection cable	
For connecting to the network, the module is provided with a connecting cable that is approx. 60 cm long	
Button	
With this button, the EasyF-B01 can be added or removed from the network	
LED A (damper status)	
Lights up white	Initialisation
flashing green	Drive opens
Lights up green	Drive open
Flashing red-green	Drive closes
Flashing rapidly green	Drive closed
Flashing red	Alarm sensor input
LED B (module status)	
flashing green	Network communication
Lights up red	Communication error
Flashing blue	Bluetooth activated
Lights up blue	Bluetooth connection active
Lights up white	Network detection active
RFID tag	
The simple and quick addressing of the module is done via an address label (1 to 128)	
X1 motor connection	
Contact 1	Open drive
Contact 2	Ground (GND)
Contact 3	Close drive
X2 end positions	
Contacts 1 & 3	Message “OPEN”
Contacts 4 & 6	Message ”CLOSED”
Contacts 2 & 5	not used
X3 sensor	
Terminal 1	Signal input
Terminal 2	Signal output 24 V DC
Terminal 3	Supply voltage 24 V DC
Terminal 4	Ground (GND)
Fastening	
On the rear, the module has two permanent magnets for tool-free mounting and a 4.8 mm bore for mechanical fastening	

Dimensions

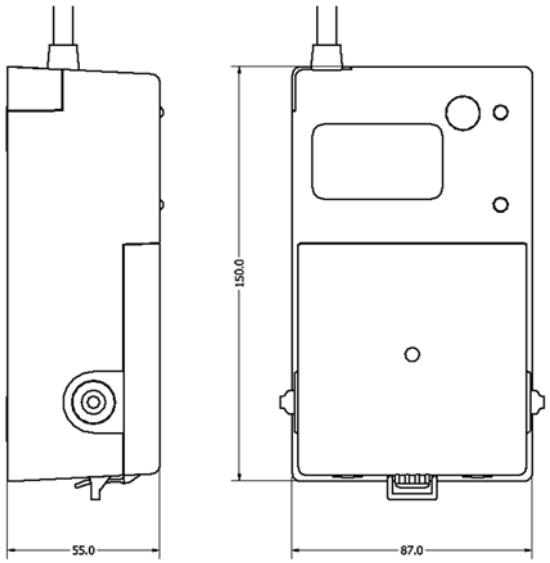

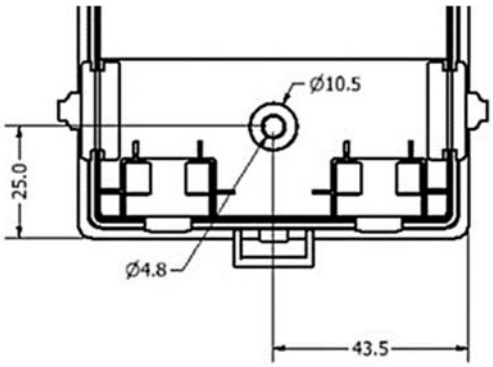

Special features

Two permanent magnets are embedded on the rear of the module for mounting it to the ventilation ducts without tools.
The EasyF-B01 is controlled by the EasyBus system via the so-called RFID tag. This address label, which has an integrated microchip, automatically stores the attached address in the module when the EasyBus network is initialised.
The motor control module EasyF-B01 has a Bluetooth interface. The address in the module can be adjusted using a smartphone with IOS or Android operating system and the required application (app). In addition, it is possible to control individual modules on site for test runs, for example, when the Bluetooth function on the EasyS-H01 is activated centrally.
For example, it is possible to integrate a smoke switch into the system via the integrated sensor input. When the sensor input is opened, the respective drive connected to the same module is automatically closed. It is also possible to assign this input contact to other drives by means of system programming.

Technical data

Power supply	230 V AC
Connecting cable length	Approx. 60 cm
Connecting cable dimensioning	1.32 mm²
Motor voltage	24 V DC
Maximum motor power	10 VA
Drive voltage output	Nom. 24 V DC / max. 26.4 V DC
Drive power output	max. 0.3 A
Drive connection	“AMP“ plug
Sensor voltage output	Nom. 24 V DC / max. 26.4 V DC
Sensor power output	0.6 VA
Sensor connection	Min. 0.2 mm² - max. 1.0 mm²
Ambient temperature (in operation)	5 to 40° C
Ambient temperature (storage)	-10 to 60° C
Ambient humidity	0 - 95% rH, non-condensing
Protection class	2 / IP 40

EasyF-B11 (motor control module 230 V AC)

The EasyF-B11 module is used for monitoring and controlling a 230 V AC drive, for example of a fire protection or smoke extraction damper. In addition, the EasyF-B11 has the option of integrating a smoke switch.

The motor control module EasyF-B11 is the successor module of the EasyF-AAC, which will replace the EasyF-AAC in the medium term due to further technical developments. The EasyF-B11 is compatible in all respects with its predecessor, the EasyF-AAC. As a result of further technical development, the EasyF-B11 is characterised by even simpler installation and addressing of the field level and is also equipped with additional functions that make the overall system even more user-friendly.

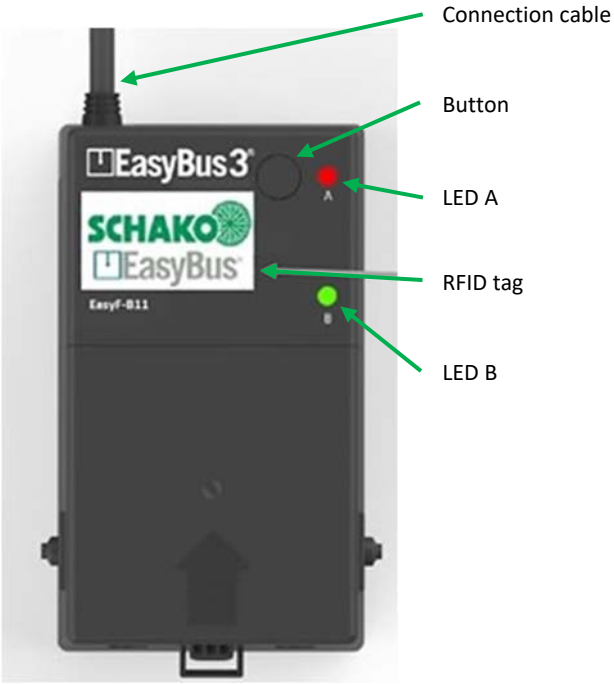

Connection cable	
For connecting to the network, the module is provided with a connecting cable that is approx. 60 cm long	
Button	
With this button, the EasyF-B11 can be added or removed from the network	
LED A (damper status)	
Lights up white	Initialisation
flashing green	Drive opens
Lights up green	Drive open
Flashing red-green	Drive closes
Flashing rapidly green	Drive closed
Flashing red	Alarm sensor input
LED B (module status)	
flashing green	Network communication
Lights up red	Communication error
Flashing blue	Bluetooth activated
Lights up blue	Bluetooth connection active
RFID tag	
The simple and quick addressing of the module is done via an address label (1 to 128)	
X1 motor connection	
Contact L1	Open drive
Contact N	
Contact L2	Close drive
X2 end positions	
Contacts S1 & S2	Message ”CLOSED”
Contacts S4 & S6	Message “OPEN”
Contacts S2 & S5	not used
X3 sensor	
Terminal 1	Signal input
Terminal 2	Signal output 24 V DC
Terminal 3	Supply voltage 24 V DC
Terminal 4	Ground (GND)
Fastening	
On the rear, the module has two permanent magnets for tool-free mounting and a 4.8 mm bore for mechanical fastening	

Dimensions

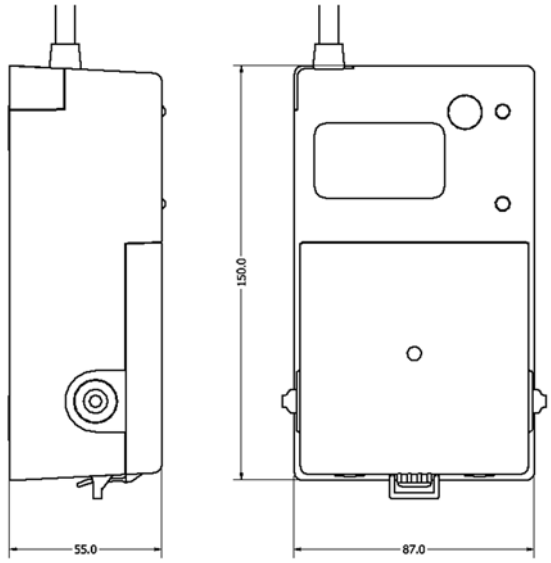

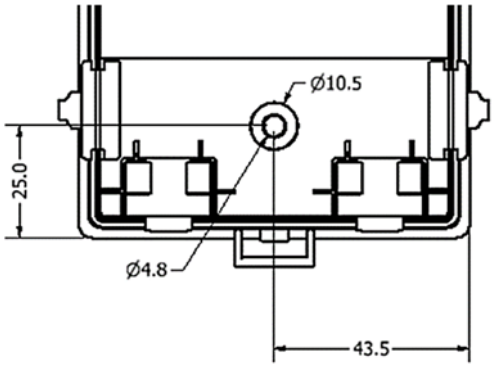

Technical data

Power supply	230 V AC
Connecting cable length	Approx. 60 cm
Connecting cable dimensioning	1.32 mm²
Max. power consumption:	9.6 VA
	4.6 W
Drive voltage output	230 V AC
Drive power output	12.5 VA
Sensor voltage output	Nom. 24 V DC / max. 26.4 V DC
Sensor power output	0.6 VA
Sensor connection	Min. 0.2 mm² - max. 1.0 mm²
Ambient temperature (in operation)	5 to 40° C
Ambient temperature (storage)	-10 to 60° C
Ambient humidity	0 - 95% rH, non-condensing
Protection class	2 / IP 40

Special features

Two permanent magnets are embedded on the rear of the module for mounting it to the ventilation ducts without tools.
The EasyF-B11 is controlled by the EasyBus system via the so-called RFID tag. This address label, which has an integrated microchip, automatically stores the attached address in the module when the EasyBus network is initialised.
The motor control module EasyF-B11 has a Bluetooth interface. The address in the module can be adjusted using a smartphone with IOS or Android operating system and the required application (app). In addition, it is possible to control individual modules on site for test runs, for example, when the Bluetooth function on the EasyS-H01 is activated centrally.
For example, it is possible to integrate a smoke switch into the system via the integrated sensor input. When the sensor input is opened, the respective drive connected to the same module is automatically closed. It is also possible to assign this input contact to other drives by means of system programming.

EasyF-V01 (universal control module 24 V DC)

The EasyF-V01 module is used for monitoring and controlling two independent steadily regulating 24 V DC drives, for example VAV (Variable Air Value), valves, control dampers, etc.
In addition, it has four universal inputs (0-24 V, 0-10 V, PT100, PT1000, NTC) via which signals from, for example $C0_2$ sensors, temperature sensors, etc. can be integrated into the EasyBus system.
The universal control module EasyF-V01 is the successor module of the EasyF-VDC, which will replace the EasyF-VDC in the medium term due to further technical developments. The EasyF-V01 is compatible in all respects with its predecessor, the EasyF-VDC. As a result of further technical development, the EasyF-V01 is characterised by even simpler installation and addressing of the field level and is also equipped with additional functions that make the overall system even more user-friendly.

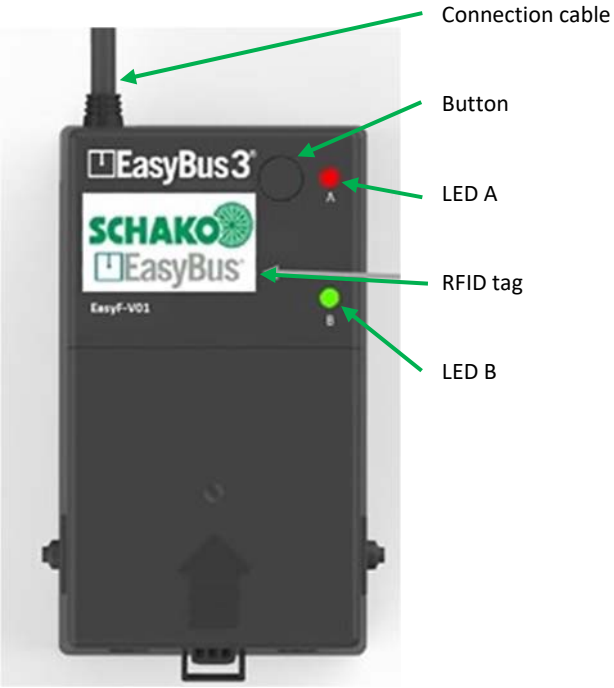

Connection cable	
For connecting to the network, the module is provided with a connecting cable that is approx. 60 cm long	
Button	
With this button, the EasyF-B11 can be added or removed from the network	
LED A (IBN status)	
Lights up white	Initialisation
Lights up green	Ready for operation
LED B (module status)	
Pulsating green	Communication in function
Lights up red	Communication error
Flashing blue	Bluetooth activated
Lights up blue	Bluetooth connection active
Lights up white	Network detection active
RFID tag	
The simple and quick addressing of the module is done via an address label (1 to 128)	
X1 (VAV1) & X2 (VAV2)	
Terminal 0 V	GND
Terminal 24 V	Supply voltage 24 V DC
Terminal Y	Analogue output (0…10 V)
Terminal U	Analogue input (0…10 V)
X3, X4, X5, X6 (universal input)	
Terminal 0 V	GND
Terminal 24 V	Supply voltage 24 V DC
Terminal IN	Signal input
Fastening	
On the rear, the module has two permanent magnets for tool-free mounting and a 4.8 mm bore for mechanical fastening	

Dimensions

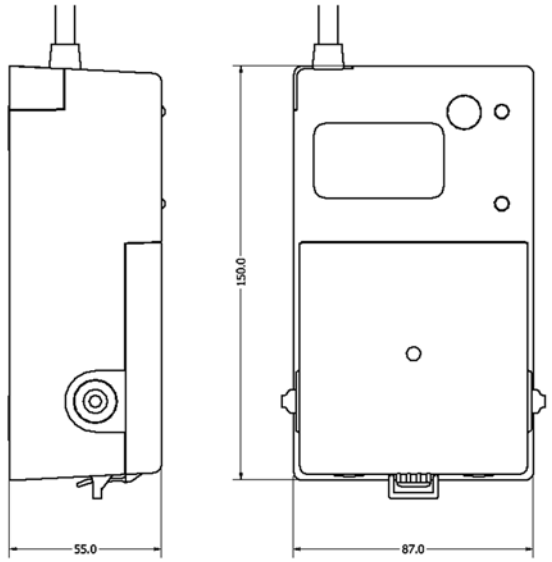

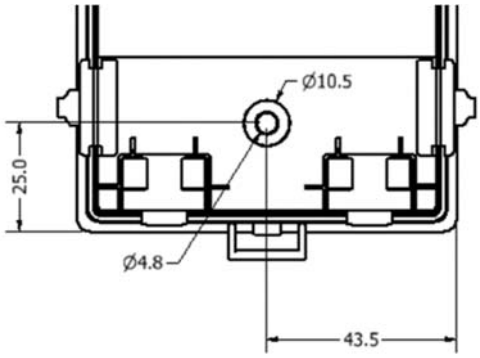

Technical data

Power supply	230 V AC
Connecting cable length	Approx. 60 cm
Connecting cable dimensioning	1.32 mm²
Max. power consumption:	9.5 VA
	4.6 W
Drive voltage output	24 V DC
Drive power output	5.5 VA
Analogue input, output voltage drive	0…10 V DC
Universal input voltage (digital)	0…24 V DC
Universal input voltage (analogue)	0…10 V DC
Universal input RTD range	0…65 kOhm
Sensor connection	Min. 0.2 mm² - max. 1.0 mm²
Ambient temperature (in operation)	5 to 40° C
Ambient temperature (storage)	-10 to 60° C
Ambient humidity	0 - 95% rH, non-condensing
Protection class	2 / IP 40

Special features

Two permanent magnets are embedded on the rear of the module for mounting it to the ventilation ducts without tools.
The EasyF-V01 is controlled by the EasyBus system via the so-called RFID tag. This address label, which has an integrated microchip, automatically stores the attached address in the module when the EasyBus network is initialised.
The EasyF-V01 motor control module has a Bluetooth interface. The address in the module can be adjusted using a smartphone with IOS or Android operating system and the required application (app). In addition, it is possible to control individual modules on site for test runs, for example, when the Bluetooth function on the EasyS-H01 is activated centrally.

EasyF-VAC (analogue control module 24 V AC)

The EasyF-VAC module is used for monitoring and controlling two independent steadily regulating AC drives, for example VAV (Variable Air Value), valves, control dampers, etc.
Two 24 V AC drives can be connected to each EasyF-VAC module.

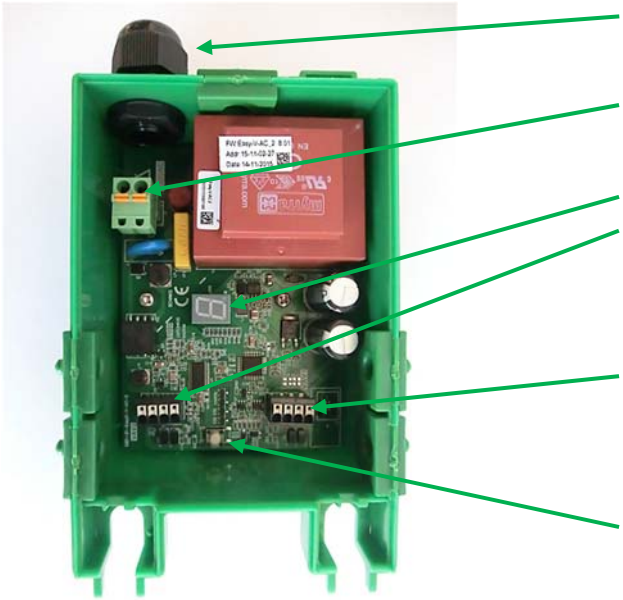

Connection cable	
In the -MASD model, the module is provided at the factory with a connecting cable that is approx. 90 cm long	
Network connection	
Terminal L	230 V AC (network voltage)
Terminal N	Zero conductor
7-segment display	
Motor connection 2	
Terminal 0 V	Ground (GND)
Terminal 24 V	Supply voltage 24 V AC
Terminal ↓	Control signal 0 – 10 V
Terminal ↑	Feedback 0 – 10 V
Motor connection 1	
Terminal 0 V	Ground (GND)
Terminal 24 V	Supply voltage 24 V AC
Terminal ↓	Control signal 0 – 10 V
Terminal ↑	Feedback 0 – 10 V
Button	
This button is used to address the module	

Technical data

Power supply	230 V AC
Connecting cable length (-MASD)	Approx. 90 cm
Connecting cable dimensioning	1.0 mm²
Power consumption at zero load	1.7 W
Drive voltage output	24 V AC
Drive power output	max. 0.15 A
Signal output	0 - 10 V
Signal input	0 - 10 V
Drive connection	Spring terminals 0.2 - 1.5 mm²
Ambient temperature (in operation)	5 to 40° C
Ambient temperature (storage)	-10 to 60° C
Ambient humidity	0 - 95% rH, non-condensing
Protection class	2 / IP 40

EasyF-VMP (analogue control module with MP interface)

The EasyF-VMP module is used for monitoring and controlling two MP-bus-capable drives. The MP interface makes it possible to query other drive parameters in addition to the usual setpoint/actual values. This would be, for example, the damper position in the case of a VAV (Variable Air Value) in order to set up an energy-optimised control.
Two 24 V DC drives that have an MP interface can be connected to each EasyF-VMP module.

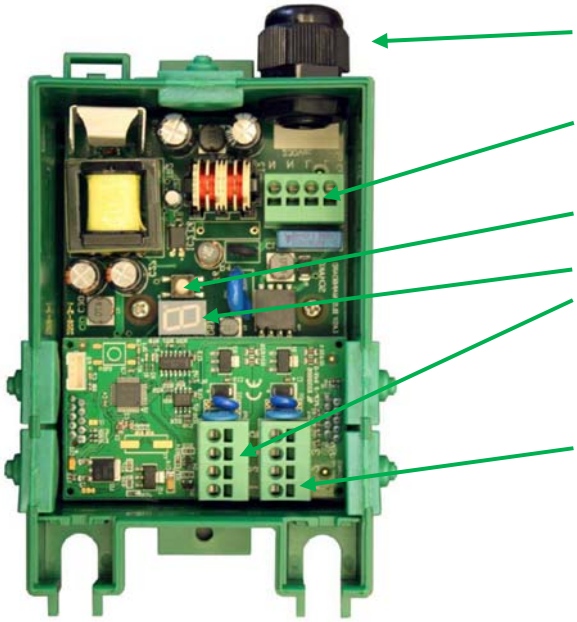

Connection cable	
In the -MASD model, the module is provided at the factory with a connecting cable that is approx. 90 cm long	
Network connection	
Terminal L	230 V AC (network voltage)
Terminal N	Zero conductor
Button	
This button is used to address the module	
7-segment display	
Motor connection 2	
Terminal 1	Ground (GND)
Terminal 2	Supply voltage 24 V AC
Terminal 3	Control signal 0 – 10 V
Terminal 5	Feedback via MP protocol
Motor connection 1	
Terminal 1	Ground (GND)
Terminal 2	Supply voltage 24 V AC
Terminal 3	Control signal 0 – 10 V
Terminal 5	Feedback via MP protocol

Technical data

Power supply	230 V AC
Connecting cable length (-MASD)	Approx. 90 cm
Connecting cable dimensioning	1.0 mm²
Power consumption at zero load	1.7 W
Drive voltage output	24 V AC
Drive power output	max. 0.15 A
Signal output	0 - 10 V
Signal input	MP protocol
Drive connection	Spring terminals 0.2 - 1.5 mm²
Ambient temperature (in operation)	5 to 40° C
Ambient temperature (storage)	-10 to 60° C
Ambient humidity	0 - 95% rH, non-condensing
Protection class	2 / IP 40

EasyF-RMM (smoke detector module)

The EasyF-RMM module is used to integrate the smoke switch type RMSII-L into the 230 V EasyBus network. The smoke switches of the type RMSII-L are used to monitor smoke gas in the ventilation ducts.
A maximum of two smoke switches RMSII-L can be connected to the EasyF-RMM module.
The smoke switch RMSII-L is connected without tools via a 9-pin Sub-D cable which only needs to be plugged in. The smoke switch, in contrast to other products, has the advantage of selective evaluation and differentiates between malfunction, contamination and alarm.

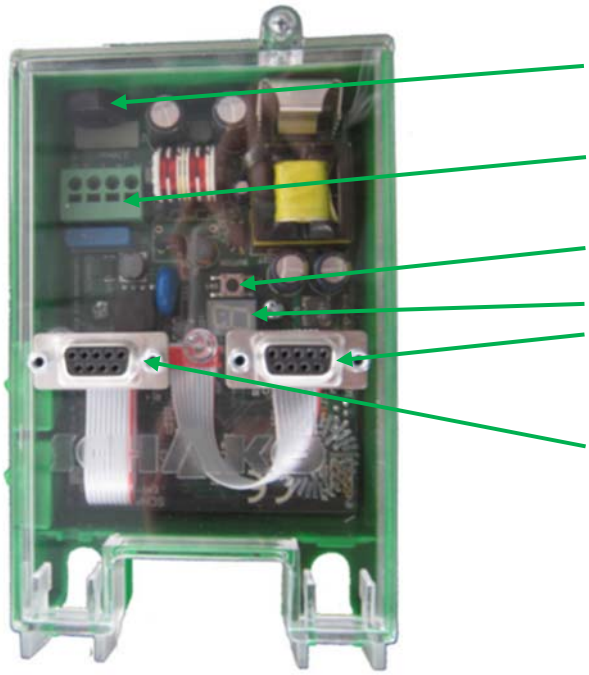

Connection cable	
In the -MASD model, the module is provided at the factory with a connecting cable that is approx. 90 cm long	
Network connection	
Terminal L	230 V AC (network voltage)
Terminal N	Zero conductor
Button	
This button is used to address the module	
7-segment display	
Smoke switch connection 2	
9-pin Sub-D connection for a smoke switch of the type RMSII-L. The assignment of the individual contacts can be found in the RMSII-L documentation	
Smoke switch connection 1	
9-pin Sub-D connection for a smoke switch of the type RMSII-L. The assignment of the individual contacts can be found in the RMSII-L documentation	

Technical data

Power supply	230 V AC
Connecting cable length (-MASD)	Approx. 90 cm
Connecting cable dimensioning	1.0 mm²
Power consumption at zero load	1.4 W
Voltage output RMSII-L	24 V AC
Power output RMSII-L	max. 40 mA
Connection RMSII-L	9-pin Sub-D connector
Ambient temperature (in operation)	5 to 40° C
Ambient temperature (storage)	-10 to 60° C
Ambient humidity	0 - 95% rH, non-condensing
Protection class	2 / IP 40

EasyF-IOM (digital input / output module)

The EasyF-IOM module is equipped with four digital inputs and potential-free changeover contact outputs, which can be switched or monitored independently of one another.
To the contact marked with + of the EasyF-IOM module, a 24 V DC voltage is applied and then switched via a suitable contact. Once the contact has been activated, the voltage can be processed and visualised in the system. Likewise, the EasyF-IOM module allows up to four different switching functions to be carried out via the potential-free outputs. At each output, up to 6 A can be switched at 30 V DC or 250 V AC.
The switching/wiring states are visualised via LEDs.
Technical data

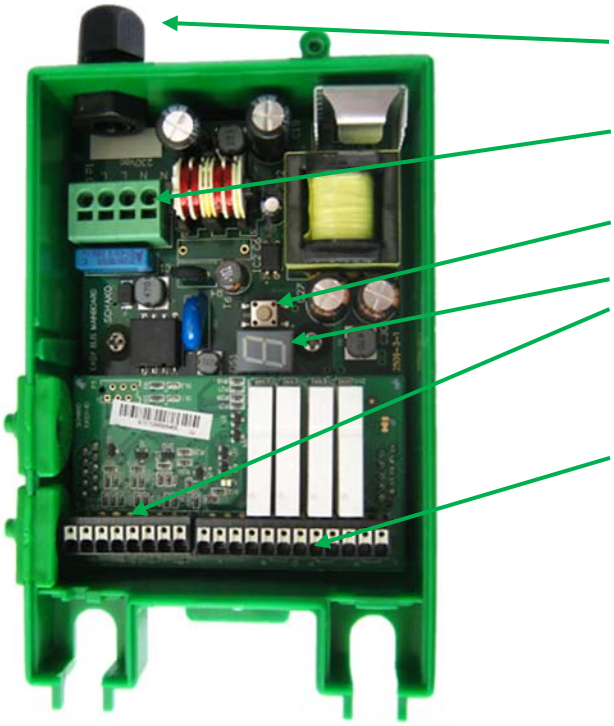

Connection cable	
In the -MASD model, the module is provided at the factory with a connecting cable that is approx. 90 cm long	
Network connection	
Terminal L	230 V AC (network voltage)
Terminal N	Zero conductor
Button	
This button is used to address the module	
7-segment display	
Four digital inputs	
Terminals 1 & 2	Input A / 24 V DC output A
Terminals 3 & 4	Input B / 24 V DC output B
Terminals 5 & 6	Input C / 24 V DC output C
Terminals 7 & 8	Input D / 24 V DC output D
Four digital outputs (changeover relay)	
Terminals 1, 2, 3	COM / NO / NC output A
Terminals 4, 5, 6	COM / NO / NC output B
Terminals 7, 8, 9	COM / NO / NC output C
Terminals 10, 11, 12	COM / NO / NC output D

Power supply	230 V AC
Connecting cable length (-MASD)	Approx. 90 cm
Connecting cable dimensioning	1.0 mm²
Power consumption at zero load	1.4 W
DI output voltage	24 V AC
Switching voltage	30 V DC / 230 V AC
Switching capacity	max. 6 A
DI connection	Spring terminals 0.2 - 1.0 mm²
DO connection	Spring terminals 0.2 - 1.0 mm²
Ambient temperature (in operation)	5 to 40° C
Ambient temperature (storage)	-10 to 60° C
Ambient humidity	0 - 95% rH, non-condensing
Protection class	2 / IP 40

EasyF-I8M (digital input module)

The EasyF-I8M module is equipped with 8 digital inputs that can be monitored independently of one another.
To the contact marked with + of the EasyF-I8M module, a 24 V DC voltage is applied and then switched via a suitable contact. Once the contact has been activated, the voltage can be processed and visualised in the system.
The switching states are visualised via LEDs in the module.

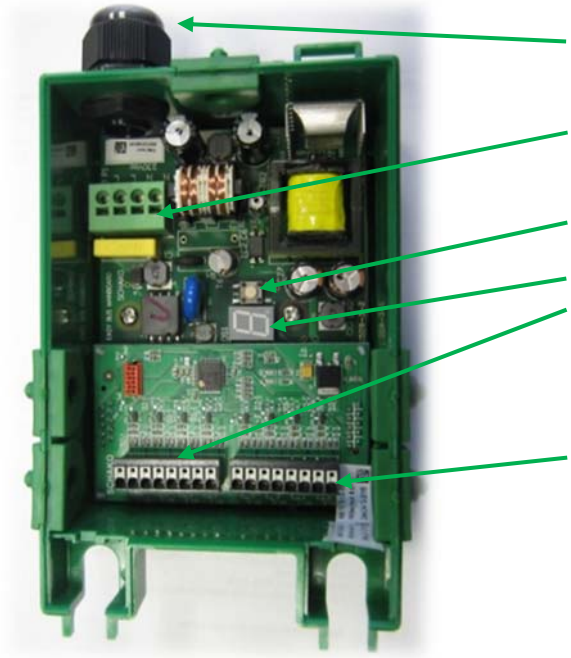

Connection cable	
In the -MASD model, the module is provided at the factory with a connecting cable that is approx. 90 cm long	
Network connection	
Terminal L	230 V AC (network voltage)
Terminal N	Zero conductor
Button	
This button is used to address the module	
7-segment display	
Digital inputs (1 to 4)	
Terminals 1 & 2	Input A / 24 V DC output A
Terminals 3 & 4	Input B / 24 V DC output B
Terminals 5 & 6	Input C / 24 V DC output C
Terminals 7 & 8	Input D / 24 V DC output D
Digital inputs (5 to 8)	
Terminals 9 & 10	Input E / 24 V DC output E
Terminals 11 & 12	Input F / 24 V DC output F
Terminals 13 & 14	Input G / 24 V DC output G
Terminals 15 & 16	Input H / 24 V DC output H

Technical data

Power supply	230 V AC
Connecting cable length (-MASD)	Approx. 90 cm
Connecting cable dimensioning	1.0 mm²
Power consumption at zero load	1.3 W
DI output voltage	24 V AC
DI connection	Spring terminals 0.2 - 1.0 mm²
Ambient temperature (in operation)	5 to 40° C
Ambient temperature (storage)	-10 to 60° C
Ambient humidity	0 - 95% rH, non-condensing
Protection class	2 / IP 40

EasyS-C96 (Central Processing Unit)

The EasyS-C96 is used for central data processing; it cyclically executes the system-specific program. It also checks the states of the connected modules based on the information from the EasyBus master or the EasyS-H01 evaluation unit. This information can, among other things, be visualized on the EasyBus touch panel and exchanged with the management level via almost any common protocol. Currently the following protocols are supported: BacNet and Modbus RTU. Other protocols are available upon request. In addition, the controller can also be integrated into an on-site network via a web server or FTP.

EasyS-C96

On the rear, the EasyS-C96 controller has two DIN fastening points for fastening it to a DIN rail without tools.
A Modbus network (e.g. RS-485) must be terminated at the network ends. With the Easy terminating resistor, which is included in the scope of delivery of the Easy controller, the RS-485 signals are set to the correct signal level and the integrated 120-ohm resistor prevents signal reflections on the RS-485 line.

Technical data

Supply voltage	24 V DC +10%
Power consumption	max. 12 W
Dimensions (BxHxT)	315x130x44 mm
Universal inputs	5
Digital inputs	10
Digital outputs	8
Relay outputs	12 (4 of them as changeover contacts)
Switching capacity	250 V AC, 4 A
Analogue inputs	8 (0-10 V, 12 bit)
Analogue outputs	8 (0-10 V, 12 bit)
Battery (monitored)	CR2032 / lithium 3 V
Data backup	1 to 3 years
Ambient temperature (in operation)	0 to 55° C
Ambient temperature (storage)	-25 to 70° C
Ambient humidity	10-95% rH, non-condensing
Protection class	2 / IP 40

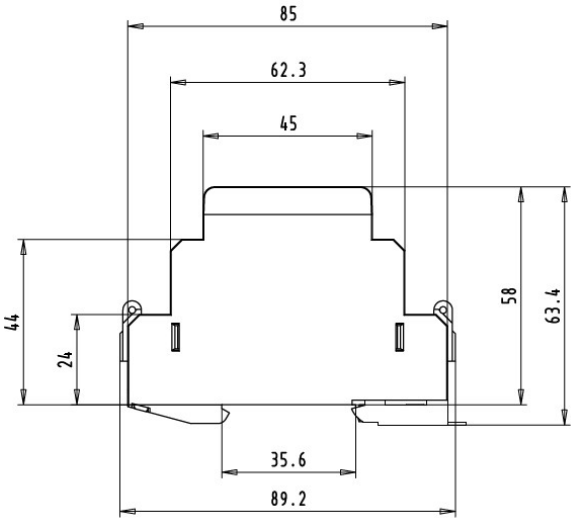

Terminating resistor (source: SBC)

EasyS-H01 (evaluation unit)

The evaluation unit EasyS-H01 is the communication gateway between the central processing unit (EasyS-C96) and the EasyS-M01 master units connected to the EasyS-H01. In Easy networks with max. three master units, only field modules of the type EasyF-B01 or EasyF-ADC and only low requirements for digital inputs or outputs, the evaluation unit EasyS-H01 can also be used as a central control unit or gateway to the building management level. In a network constellation with only EasyF-B01 or EasyF-ADC in the field level and the EasyS-H01 as the central unit, it is possible to configure the system via the pre-programmed menu function and the integrated monitor on the EasyS-H01 evaluation unit.
The EasyS-H01 supports the Modbus RTU and Modbus TCP protocols for communication with the CPU (EasyS-C96) or the building management level.
A maximum of three EasyS-M01 master units can be assigned to one evaluation unit EasyS-H01. EasyS-H01 and one or several master units are networked via RJ45. Communication between EasyS-H01 and EasyS-M01 is carried out via a proprietary bus protocol to ensure power supply and communication via one cable.

In addition to the large number of “onboard” interfaces and connections, the EasyS-H01 evaluation unit has a slot on the top for various micro SD cards on which a backup of the configuration file can be stored. It is possible to write and import the backup file from the EasyS-H01 to the micro SD card.

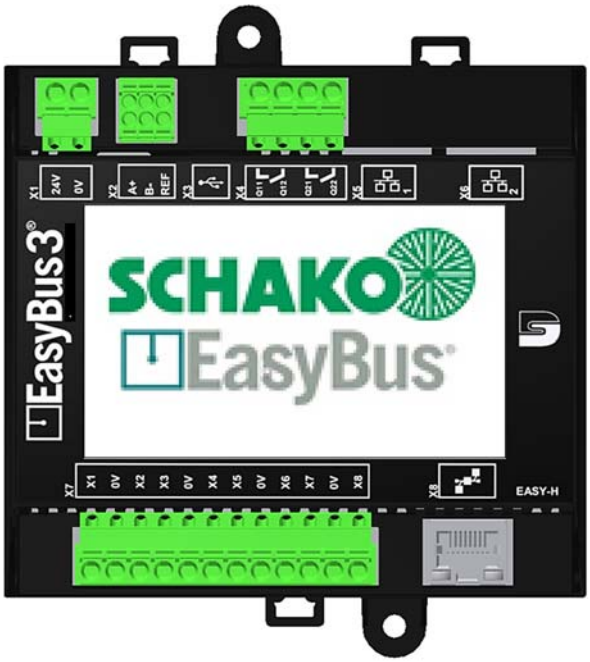

Connections

X1	**Supply voltage 24 V DC** (min. 21.6 V DC - max. 26.4 V DC) Supply current 2 A
X2	**RS485 / Modbus RTU** (9600, 19200, 36400, 56600 or 115200 bps) (8-N-2, 8-E-2 or 8-O-2)
X3	**USB connection** (mini USB, proprietary protocol)
X4	**2x output relays** Max. switching voltage 230 V AC Max. switching current 10 A
X5	**RJ45 - Modbus-TCP** Not compatible with PoE standard
X6	**RJ45 - Modbus-TCP** Not compatible with PoE standard
X7	**8 configurable inputs / outputs** Max. input voltage 30 V DC Input max. state “0” 4 V DC Input min. state “1” 10 V DC Max. output voltage 24 V DC Max. output current 100 mA Max. input voltage 30 V DC
X8	**RJ-45 proprietary** Network connection to the master units EasyS-M01 Min. Cat-5, F/FTP or S/FTP

EasyS-M01 (master unit)

The master unit EasyS-M01 serves to communicate with the field modules via Powerline communication from the mains (EasyBus network). To damp and minimise the susceptibility to interference, the master unit EasyS-M01 is equipped with an integrated filter. The filter separates the fieldbus line of a master unit from the low-voltage network of the energy supplier and vice versa, thus keeping electromagnetic interference fields, which occur in the low-voltage network of the power supply company, away from the Easy network. One master unit EasyS-M01 can manage and provide power to a fieldbus line in any topology with up to 1000 m total cable length and 128 field modules.

The connection to the evaluation unit EasyS-H01 or other master units is established via a dedicated RJ-45 cable (min. Cat-5, F/FTP or S/FTP). Communication between the evaluation unit and the master units takes place via a proprietary protocol.

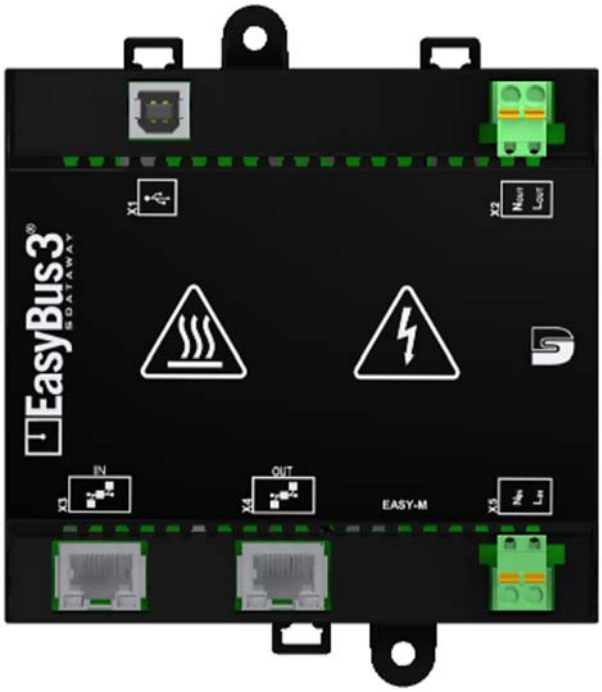

Connections

X1	**USB connection** (USB type B, proprietary protocol) For maintenance purposes only
X2	**EasyBus network** Voltage output 230 V AC max. 3 A
X3	**Communication input** RJ-45 / proprietary network from EasyS-H01 or previous EasyS-M01
X4	**Communication output** RJ-45 / proprietary network to further EasyS-M01
X5	**Supply voltage** Input voltage 230 V AC Maximum power 2000 VA

Connection example

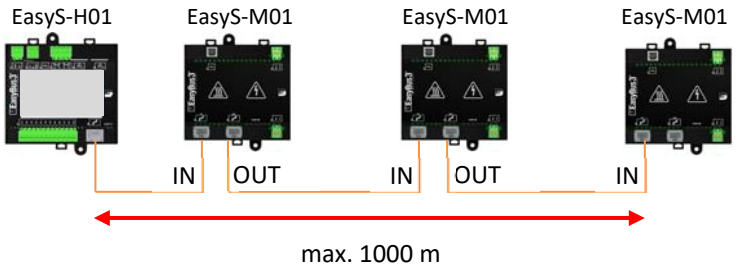

max. 3 EasyS-M01

EasyS-SW5 (5-port switch)

The “unmanaged” EasyS-SW5 switch works according to the plug&work principle. It is used to network several CPUs (EasyS-C96) with each other or to network CPU and touch monitor (EasyS-TP1). It requires a 24 V DC power supply and is plugged into the DIN rail.

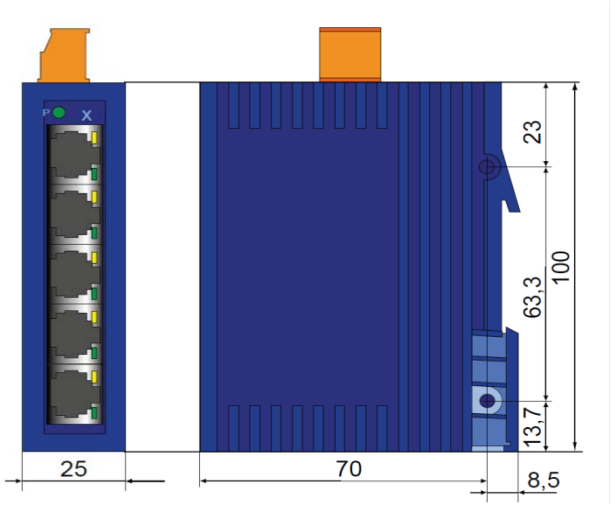

Source: SBC

Technical data

Operating voltage	9.6V to 32V DC
Operating temperature	0 °C to +60°C
Current consumption 24 V DC	max. 100 mA
Display / Diagnosis	1 green LED -> Power 5 yellow LEDs -> Data 5 green LEDs -> data, link status
Port type / number	Ethernet 10 / 100 Mbits/s Number of slots 5 RJ45
Network line lengths	Twisted pair (TP) 0 to 100 m
Network cascading depth	Any line / star configuration
Protection class	IP30
Dimensions BxHxT	50x120x50 mm
Weight	0.3 kg

EasyS-P3A (power supply unit)

The EasyS-P3A is an extremely compact 24 V DC power supply unit that is short-circuit proof and overload protected. It is mounted on a DIN rail. The EasyS-P3A is used to generate the 24 V DC power supply for the CPU (EasyS-C96), the evaluation unit (EasyS-H01), the touch panel (EasyS-TP1), etc.

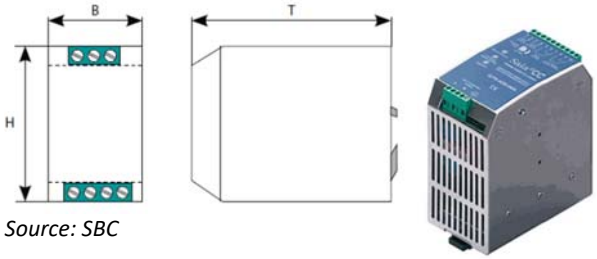

Source: SBC

Technical data

Supply voltage	115 to 230 V AC
Internal fuse	4 A
Ambient temperature (operation)	-25 to + 70 °C Load reduction >50°C, 2.5% /°C
Humidity	No dewing 95% at 25°C
Relative humidity	10..95% rel. non-condensing
Short-circuit protection	available
Protection class	IP20
Dimensions BxHxT	50x120x50 mm
Weight	0.3 kg

EasyS-TP1 (touch panel)

The 10.4" micro browser panel is equipped with a high-quality brilliant TFT touch display with VGA resolution.
A particular feature of the web panel is its small size. The frame around the display is much smaller than in common operating units of this class, resulting in a useful surface area of 10.4" while maintaining the size of an 8.4" device. The stable aluminium front of the micro browser panel is provided with a continuous edge-free protective film that prevents contamination. The EasyS-TP1 is used to visualise the states of the actuators and sensors integrated in the network. It also serves as an operating interface with a freely configurable user interface. Thanks to the web-based programming, operating and visualisation interfaces can be adapted to any type of use and system operator requirements. Any number of CPUs (EasyS-C96) can be assigned to a touch panel. Larger touch panels are also available upon request.

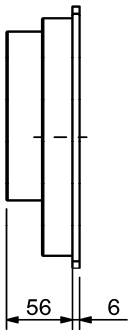

EasyS-TP1 connections

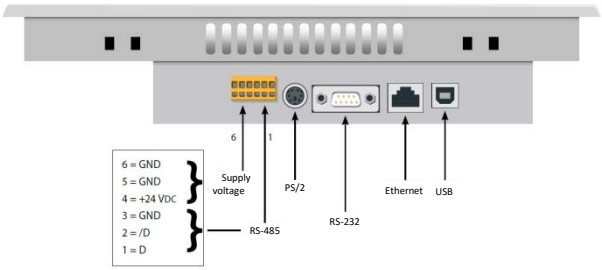

Source: SBC

The EasyS-TP1 touch panel is delivered pre-wired in the preassembled switch cabinets type EasyS-W4x and EasyS-A5x. It is also possible to place the touch panel decentralised and independent of the switch cabinet in the building and to connect it to the CPU (EasyS-C96) via Ethernet.

Technical data

Colours	65536
Display	10.4" TFT
Resolution	VGA 640x480 pixels
Touch screen	Resistive touch screen
Contrast setting	yes
Backlight	CCFL
Other	Surface without edges Dirt collector
Mounting position	Vertical or horizontal
Connection voltage	18 to 32 V DC
Current consumption at UN	600 mA at 24 V DC
Protection type	IP65
Size (BxHxT) [mm]	281x221x56
Detail (BxH) [mm]	262 x 202

EasyS-WR (remote maintenance router)

In addition to the obligatory, secure remote access to the system via VPN, the EasyS-WR1 remote maintenance router contains a variety of data services that enable data recording, alarming and visualisation.
The router has four Ethernet interfaces that can be individually assigned to the LAN or WAN interface via the configuration. The EasyS-WR1 can also be connected to existing WLAN networks for internet access via the supplied expansion card for WLAN. The expansion card (mobile radio LTE), which is also already integrated, allows network-independent access to the EasyBus system. All common frequency bands (GSM / GPRS / EDGE / UMTS / HSUPA / LTE) with up to 150 Mbit are supported.
Optionally, it is possible to upgrade the remote maintenance router EasyS-WR1 with a plug-in card for serial interfaces (RS232 / -422 / -S485).
Thus, the remote maintenance router EasyS-WR1 enables remote system access without the need for a connection to on-site networks.
This enables, on the one hand, low-cost remote maintenance of the connected EasyBus systems and, at the same time, fast and flexible technical support.

Technical data

VPN mode	OpenVPN in SSL UDP or HTTPS mode
Data logging	Up to 1,000,000 data points power-failure-proof in the flash memory
Interfaces	4x RJ45 Ethernet 10/100 Mbits/s
1x SD card slot	
Power supply	12 to 24 V DC / max. 30 W
Operating temperature	-25 °C to +60 °C
Relative humidity	10..95% rel. non-condensing
Mounting	DIN rail
Protection class	IP20
Dimensions BxHxT	55x133x122 mm
Weight	0.5 kg

Z modules EasyZ-MASD / EasyZ-ESD / EasyZ-KST

		Connection socket	Feed socket
Component picture			
Designation		EasyZ-MASD	EasyZ-ESD
Notes		For quick connection of the field modules to the flat cable without tools, not suitable for feeding into the flat cable	Suitable for feeding into flat cable or flat cable branching
Dimensions in [mm]	Height Width Length	34 30 90	33 33 55
Weight	[g]	85	45
Fire load	[kWh]	0.36	0.24
Fire behaviour		UL94-V2	
Standards		IEC 60998-1 IEC 60998-2-1 IEC 60998-2-3	
Plastic parts		Light-grey, transparent, halogen-free	
Metal parts		Corrosion-protected	
Number of conductor cross-sections		3x2.5 mm²	
Conductor receptacle	[mm]	Ø 3.0	
Pivot screws		-	Phillips-tip screwdriver no. 1
Clamping screws		Screwdriver no. 1	
Torque of use	[Nm]	0.7	
Conductor cross-section	[mm²]	2.5	
Nominal voltage	[V]	250	
Test current	[A]	16	
Environment		Dry UV-protected area	
Operating temperature		-15 °C to +40°C	
Installation temperature		min. +5°C	
Protection type		IP20	

	Cable end piece
Component picture	
Designation	EasyZ-KST
Material	Polycarbonate (PC), transparent, halogen-free, silicone gel
Dimensions in [mm] (BxHxT)	15x25x40
Weight [g]	9.5
Protection class	IP68

EasyZ-FKP and EasyZ-FKH

Flat cable type	PVC	halogen-free
Designation	EasyZ-FKP	EasyZ-FKH
Product properties and standards		
Sheath type	Oil-resistant PVC	FR / LSOH
Copper conductor to IEC 60228	Tin-plated copper, finely stranded conductor class 5 according to EN 60228	Tin-plated copper, finely stranded conductor class 5 according to EN 60228
Wire insulation	PVC to EN50363-3	Flame-retardant polyolefin to HD 604-5H
Outer jacket	PVC to EN 50363-4	Flame-retardant polyolefin to IEC 60502-1
Flame-retardant	☑	☑
Self-extinguishing according to IEC 60332-1-2	☑	☑
Halogen-free, no corrosive gases to IEC 60754-1/2		☑
Low fire propagation to IEC 60332-3-24		☑
low smoke formation according to IEC 61034-2		☑
High-voltage current component		
Copper conductor	Tin-plated, finely stranded	
Wire insulation	PVC	Flame-retardant polyolefin
Wire colours	Brown, green/yellow, blue	
Conductor cross-section	2.5 mm²	
Test voltage	4 kV / 50 Hz	
Nominal voltage	0.6 / 1 kV	
Conductor resistance	Max. 8.21 Ω/km	
Copper index	72 kg/km	
Technical data		
Dimensions	16.5x6 mm	
Weight	185 g/m	
Fire load	0.583 kWh/m	1.02 kWh/m
Number of cross-sections	3x2.5 mm²	
Colour of the casing	Light-grey	
General data		
Environment	UV-protected area	
Operating temperature	-15 °C to +90°C	
Installation temperature	min. +5°C	

Example of installation components

Source: Wörtz System Catalogue

Upon request, the installation components (EasyZ-xxx) are also available in functional integrity (F30 / -F90).

ORDER CODE FOR MODULES

01	02	03
Type	Module designation	Accessories
Example		
EasyF	-ADC	-OASD

Sample
EasyF-ADC-OASD
EasyBus module |DC24 drive module | without connection socket

Order details
01 - EASY Bus group
EasyF = Field modules

02 - Module designation
ADC = Drive module DC24
AAC = Drive module AC230
VDC = DC volumetric flow controller
VAC = AC volumetric flow controller
VMP =MP volumetric flow controller
RMM = Smoke detection module
RXE = EnOcean radio receiver
ETX = EnOcean radio transmitter
IOM = Input / output module
I8M = Input module with 8 inputs

03 - Accessories
OASD = without connection socket
MASD = with connection socket

ORDER CODE FOR ACCESSORIES

01	02
Type	Accessory designation
Example	
EasyZ	-FKP

Sample
EasyZ-FKP
EasyBus flat cable | flat cable 3x2.5 mm², PVC casing

Order details
01 - EASY Bus group
EasyZ = accessories

02 - Accessory designation
FKP = flat cable 3x2.5 mm² PVC casing
FKH = flat cable 3x2.5 mm² halogen-free casing
ESD = Feed socket
KST = Cable end piece

ORDER CODE FOR SWITCH CABINET ASSEMBLY

The EasyBus components are installed in a switch cabinet. Suitable predefined ordering options can be found below. If you do not find your required configuration, please contact us.
For the switch cabinet configurations, the standard option for the respective item will be delivered unless stated otherwise in the order.

01	02	03	04	05	06	07	08
Type	Building type	Cable entry	Door hinge	Touch panel	Communication protocol for building control system	Switch	Reserve
Example							
EasyS	-W41	-KU	-LI	-TP1	-000	-SW5	-000

Sample:
EasyS-W41-KU-LI-TP1-000-SM5-000
EasyBus switch cabinet components | wall cabinet 41 | cable entry at the bottom | door hinge left | with touch panel TP1 | without interface | with switch SW5 | without extensions

Order details
01 - Type
EasyS = Switch cabinet components
02 - Building type

	EasyS-M01	Easy-H01	Easy-C96	max. Field modules
-W31	1	1	---	128
-W32	2	1	---	256
-W33	3	1	---	384
-W41	1	1	1	128
-W42	2	1	1	256
-W43	3	1	1	384
-W53	3	1	1	384
-W54	4	2	2	512
-W55	5	2	2	640
-W56	6	2	2	768

Note: The -W3x switch cabinets are only for systems that exclusively monitor and control EasyF-B01 (drive module 24 V DC) and / or EasyF-B11 (drive module 230 V AC) on the field level!

03 - Cable entry
KO = cable entry at the top
KU = cable entry at the bottom (standard)
For switch cabinets -W5x only KU possible!

04 - Door hinge
RE = right (standard)
LI = left

05 - Touch panel
TP0 = without touch panel
TP1 = with touch panel (standard)
For switch cabinet -W3x, only TP0!

06 - Communication protocol for the building control system
000 = without gateway (standard)
MOD = with gateway to Modbus RTU
BAC = with gateway to BACNET

07 - Switch
SW0 = without 5-port switch
SW5 = with 5-port switch (standard)
For switch cabinets -W3x, only SW0!

08 - Reserve
Placeholder for further criteria

SPECIFICATION TEXT

GENERAL

The bus and control system EasyBus is used for activating and monitoring electrical and mechanical fire dampers and smoke extraction dampers equipped with a 24 V DC or 230 V AC drive, smoke detectors and volumetric flow controllers with 0-10 V activation or air dampers with 2/3-point drives.
The following can be monitored and activated:

- Fire dampers
- Volumetric flow controller
- Valves
- Dampers
- Smoke detectors
- Multi-Leaf Damper
- Smoke dampers
- Sensors, etc.

The maximum cable length of the control and bus line per master unit is limited to 1000 metres. This line transmits both the 230 V AC supply voltage and the communication via PLC technology (Power Line Carrier). No additional external power supply is necessary.
The module in question is mounted at a maximum distance of 80 cm from the respective drive, allowing the cables of the drive to be connected directly to the module without requiring any further clamping point.

Up to 128 EasyBus modules can be connected per master unit. A total of up to three master units of an evaluation unit and up to two evaluation units per PLC can communicate with each other. This allows operation of up to 768 EasyBus modules with one logic programmable controller PLC. This also allows the assembly of a network consisting of several controllers that can communicate with each other.

For the EasyBus wiring, a flat cable system can be used, which minimises the installation effort. Wiring by means of a round cable (for example NYM) is also possible.

Mechanical limit switches can be connected to an EasyF-IOM in groups of up to 4 or to an EasyF-I8M in groups of up to 8.

The preassembled 24 V DC Belimo drives are plugged directly into the drive module. For 230 V AC motorised drives, suitable spring clamps are provided for activating the motorised drive and its limit switches.

Volumetric flow controllers and external sensors can be integrated via the corresponding analogue input/output module.

The smoke detector can be connected directly to the field module via a 9-pin Sub-D connector. It can distinguish between fault and alarm. The smoke detector can be reset via the bus.
The information of the bus users can be visualised via text and graphics using a touch panel.

Basis of our offer
The aim of the tender is to define technical equipment for the system operator that guarantees maximum operating safety and has a promising future. This means openness and flexibility in all directions based on the current technology standards. To sufficiently meet these targets, the following minimum requirements are established for the automation system. The automation system must cover all devices and functions defined by DIN ISO 16484. Its functional components are shown in individual items of the tender as follows:

- MSR and automation devices
- Communication and network
- Operating / Observing / Visualising
- Expandibility

For communication between the bus system and the building management system, the following system protocols can be used:

- Modbus
- BacNet

MOTOR CONTROL MODULES

EasyF-B01

The drive module EasyF-B01 controls and monitors 24 V DC motorised drives, for example of fire dampers, or 3-point drives of air diffusers. In addition, the EasyF-B01 module provides the option of connecting a 24 V DC sensor (e.g. smoke switch) and integrating it into the system. The drive module EasyF-B01 is addressed without tools via RFID tag, and the EasyF-B01 also has an integrated Bluetooth interface that can be used to control the connected drive via smartphone.

Extract from the technical data

- Connection voltage 230 V AC
- Plastic housing
- Connection to the EasyBus network via spring clamps
- AMP plug-in connections for connecting the preassembled 24 V DC drive
- Addressing the module via RFID tag
- LEDs for visual status display of the connected drives
- Type of protection IP40
- Power output max. 10 VA
- Temperature range 0...+50 °C

Product

- SCHAKO **EasyF-B01-OASD** (without connection socket for flat cable system)
- SCHAKO **EasyF-B01-MASD** (with connection socket for flat cable system)

EasyF-B01

The EasyF-B11 drive module controls and monitors 230 V AC motorised drives, for example of fire dampers, or 3-point drives of air diffusers. In addition, the EasyF-B11 module provides the option of connecting a 24 V DC sensor (e.g. smoke switch) and integrating it into the system. The drive module EasyF-B11 is addressed without tools via RFID tag, and the EasyF-B11 also has an integrated Bluetooth interface that can be used to control the connected drive via smartphone.

Extract from the technical data

- Connection voltage 230 V AC
- Plastic housing
- Connection to the EasyBus network via spring clamps
- Spring clamps for connecting the motorised drive and the limit switches
- Addressing the module via RFID tag
- LEDs for visual status display of the connected drives
- Type of protection IP40
- Power output max. 12.5 VA
- Temperature range 0...+50 °C

Product

- SCHAKO **EasyF-B11-OASD** (without connection socket for flat cable system)
- SCHAKO **EasyF-B11-MASD** (with connection socket for flat cable system)

SMOKE DETECTOR AND DIGITAL CONTROL MODULES

EasyF-RMM

The EasyF-RMM smoke detection module controls and monitors up to 2 smoke detectors of the type RMSII-L from SCHAKO. The EasyF-RMM module has its own bus address which is set without tools via push buttons.

Extract from the technical data

- Connection voltage 230 V AC
- Plastic housing
- Connection to the EasyBus network via spring clamps
- Connection two 9-pin Sub-D connectors for connecting the smoke detector
- Addressing via pushbutton on the module
- LEDs for visual display
- Type of protection IP40
- Power consumption at zero load: 1.4 watts
- Temperature range 0...+50 °C

Product

- SCHAKO **EasyF-RMM-OASD** (without connection socket for flat cable system)
- SCHAKO **EasyF-RMM-MASD** (with connection socket for flat cable system)

EasyF-IOM

The digital input/output module EasyF-IOM monitors up to 4 inputs and can switch and monitor up to 4 potential-free outputs.
The EasyF-IOM module has its own bus address which is set without tools via push buttons.

Extract from the technical data

- Connection voltage 230 V AC
- Plastic housing
- Connection to the EasyBus network via spring clamps
- Connection of the 4 inputs via spring clamps
- Connection of the 4 potential-free outputs via spring clamps
- Addressing via pushbutton on the module
- LEDs for visual display
- Type of protection IP40
- Power consumption at zero load: 1.4 watts
- Temperature range 0...+50 °C

Product

- SCHAKO **EasyF-IOM-OASD** (without connection socket for flat cable system)
- SCHAKO **EasyF-IOM-MASD** (with connection socket for flat cable system)

EasyF-I8M

The digital input module EasyF-I8M monitors up to 8 inputs. The EasyF-I8M module has its own bus address which is set without tools via push buttons.

Extract from the technical data

- Connection voltage 230 V AC
- Plastic housing
- Connection to the EasyBus network via spring clamps
- Connection of the 8 inputs via spring clamps
- Addressing via pushbutton on the module
- LEDs for visual display
- Type of protection IP40
- Power consumption at zero load: 1.3 watts
- Temperature range 0...+50 °C

Product

- SCHAKO **EasyF-I8M-OASD** (without connection socket for flat cable system)
- SCHAKO **EasyF-I8M-MASD** (with connection socket for flat cable system)

ANALOGUE AND MP CONTROL MODULES

EasyF-V01

The universal input/output module EasyF-V01 controls and monitors up to 2 steadily regulating DC drives. In addition, the EasyF-V01 module has four universal inputs for the integration of, for example CO_2 sensors, temperature sensors, etc. The universal module EasyF-V01 is addressed without tools via RFID tag, and the EasyF-V01 also has an integrated Bluetooth interface that can be used to control the connected drives via smartphone.

Extract from the technical data

- Connection voltage 230 V AC
- Plastic housing
- Connection to the EasyBus network via spring clamps
- Connection of the motorised drives via spring clamps
- Connection of the external sensors via spring clamps
- Addressing the module via RFID tag
- LEDs for visual display
- Type of protection IP40
- Power output max. 5.5 VA per drive
- Temperature range 0...+50 °C

Product

- SCHAKO **EasyF-V01-OASD** (without connection socket for flat cable system)
- SCHAKO **EasyF-V01-MASD** (with connection socket for flat cable system)

EasyF-VAC

The volumetric flow module EasyF-VAC controls and monitors up to 2 steadily regulating AC drives (optionally external products having similar values). The EasyF-VAC module has its own bus address which is set without tools via push buttons.

Extract from the technical data

- Connection voltage 230 V AC
- Plastic housing
- Connection to the EasyBus network via spring clamps
- Connection of the motorised drives via spring clamps
- Connection of the external sensors via spring clamps
- Addressing via pushbutton on the module
- LEDs for visual display
- Type of protection IP40
- Power consumption at zero load: 1.7 watts
- Temperature range 0...+50 °C

Product

- SCHAKO **EasyF-VAC-OASD** (without connection socket for flat cable system)
- SCHAKO **EasyF-VAC-MASD** (with connection socket for flat cable system)

EasyF-VMP

The MP bus input/output module EasyF-VMP controls and monitors up to 2 steadily regulating MP-capable Belimo drives (optionally external products having similar values). The EasyF-VMP module has its own bus address which is set without tools via push buttons.

Extract from the technical data

- Connection voltage 230 V AC
- Plastic housing
- Connection to the EasyBus network via spring clamps
- Connection of the motorised drives via spring clamps
- Connection of the external sensors via spring clamps
- Addressing via pushbutton on the module
- LEDs for visual display
- Type of protection IP40
- Power consumption at zero load: 2.5 watts
- Temperature range 0...+50 °C

Product

- SCHAKO **EasyF-VMP-OASD** (without connection socket for flat cable system)
- SCHAKO **EasyF-VMP-MASD** (with connection socket for flat cable system)

SWITCH CABINET COMPONENTS

EasyS-C96

The EasyS-C96 can communicate with up to two EasyS-H01 evaluation units via Modbus / RTU (standard). This allows assembly of a network consisting of several controllers that can communicate with each other. The controller can be used to visualise the states of the modules and of the connected actuators. The EasyS-C96 also supplies the corresponding terminating resistor for the RS485 network. The terminating resistor has a fixed value of 120 Ω. A galvanically isolated power supply provides the required signal levels for the open-circuit voltage of the signal lines.

Extract from the technical data

- Connection voltage 24 V DC ±10%
- Power consumption 12 W
- Type of protection IP20
- 5 digital inputs can optionally be used as analogue 0-10 V input
- 12 relay outputs 250 V AC, 4 A (4 of which with changeover contact)
- 8 digital outputs
- 8 analogue inputs, 12 bit, 0…10 V / 0…20 mA / PT / NI1000 / NTC10
- Battery: CR2032 lithium 3 V +
- Integrated web/FTP server

Product: SCHAKO **EasyS-C96**

EasyS-H01

The EasyS-H01 evaluation unit can communicate with up to three EasyS-M01 via a proprietary protocol. It is possible to set up a network consisting of two EasyS-H01 evaluation units using an EasyS-C96 controller. The evaluation unit EasyS-H01 exchanges the data of the assigned components with the controller EasyS-C96 via Modbus RTU. In systems in which only drives are integrated via EasyF-B01 or EasyF-B11, the evaluation unit can also be used as a stand-alone device. The evaluation unit EasyS-H01 has a graphic display via which the connected drives can be visualised and controlled. Installation in the switch cabinet is carried out on a DIN rail or two mounting tabs attached to the housing.

Extract from the technical data

- Connection voltage 24 V DC ±10%
- Supply current 2 A
- Type of protection IP20
- 8 freely configurable digital inputs/outputs
- 2 relay outputs 230 V AC, 10 A
- Modbus-RTU (9600, 19200, 36400, 56600, 115200 bps), (8-N-2, 8-E-2, 8-O-2)
- Modbus-TCP (10 / 100 Mbit), DHCP, IPV4
- BACnet IP / MSTP
- EN 60730-1, CENELEC EN50065-1

Product: SCHAKO **EasyS-H01**

EasyS-M01

One master unit EasyS-M01 can manage up to 128 field modules and supply them with voltage. The maximum total cable length that can be assigned to a master module is 1000 m. The master module EasyS-M01 has an integrated line filter which decouples the low-voltage network of the power supply company from the EasyBus network. The connection to the evaluation unit EasyS-H01 or other master units is established via a dedicated RJ-45 cable (min. Cat-5, F/FTP or S/FTP). Communication between the evaluation unit and the master units takes place via a proprietary protocol. Installation in the switch cabinet is carried out on a DIN rail or two mounting tabs attached to the housing.

Extract from the technical data

- Connection voltage 230 V AC
- Max. power consumption 2000 VA
- Type of protection IP20
- Output voltage 230 V AC
- Max. output current 3 A
- Communication with EasyS-H01 via proprietary BUS protocol
- EN 60730-1, CENELEC EN50065-1

Product: SCHAKO **EasyS-M01**

EasyS-P3A

The EasyS-P3A is used to supply, among other things, the Easy controller (EasyS-C96), the evaluation unit (EasyS-H01) and the touch panel (EasyS-TP1) with the corresponding operating voltage of 24 V DC.

Extract from the technical data

- Input: single-phase 110…240 V AC
- Output: 24 V DC / 2.5 A
- Protection class IP 20

Product: SCHAKO **EasyS-P3A**

EasyS-SW5

The EasyS-SW5 is used to quickly set up a network between, among others, one or more controllers (EasyS-C96) and a touch panel (EasyS-TP1).

Extract from the technical data

- Number of ports 5
- Ethernet 10/10 Mbits/s
- Power supply 9.6 V DC…32 V DC.

Product: SCHAKO **EasyS-SW5**

EasyS-TP1

The touch panel can be used to visualise and operate the states of the sensors / actuators in connection with the EasyS-C96. The touch panel EasyS-TP1 can be installed and operated in preassembled switch cabinets of the type EasyS-W4x or EasyS-A5x as well as decentralised from the control system in the building.

Extract from the technical data

- Display 10.4" TFT, VGA 640x480 pixels,
- 65,536 colours with touch screen, CCFL
- Backlight
- Flash memory
- Mounting in faceplates (IP65) or on-site panel

Product: SCHAKO **EasyS-TP1**

EasyS-MOD

The EasyS-MOD allows the Easy-C96 controller to exchange information with the BCS or the like via the Modbus communication protocol.

Product: SCHAKO **EasyS-MOD**

EasyS-BAC

The EasyS-BAC allows the Easy-C96 controller to exchange information with the building management system or the like via the BacNet communication protocol.

Product: SCHAKO **EasyS-BAC**

INSTALLATION ACCESSORIES

EasyZ-FKP

The EasyZ-FKP is a PVC flat cable and is used for quick and low-cost connection of bus components and the like. It is installed in UV-protected areas such as false ceilings, false floor areas or cable ducts.

Extract from the technical data

- Outer casing: PVC (oil-resistant)
- Colour of the casing: light-grey
- Number of wires: 3x2.5 mm²
- Conductor colours: brown, green/yellow, blue
- Properties: flame-resistant self-extinguishing
- according to IEC 60332-1
- Operating temperature: 15 to +90 °C

Product: SCHAKO **EasyZ-FKP**

EasyZ-FKH

The EasyZ-FKH is a halogen-free flat cable and is used for quick and low-cost connection of bus components and the like. For installation in UV-protected areas such as false ceilings, false floor areas or cable ducts.

Extract from the technical data

- Outer casing: flame-retardant polyolefin (FR/LSOH)
- Colour of the casing: light-grey
- Number of wires: 3x2.5 mm²
- Conductor colours: brown, green/yellow, blue
- Properties:
  - flame-resistant self-extinguishing according to IEC 60332-1
  - low smoke formation according to IEC61034-2
  - halogen-free
  - no corrosive gases according to IEC60754-12-1/2
  - Low fire propagation to IEC 60332-3-24
- Operating temperature: -15 to +90°C

Product: SCHAKO **EasyZ-FKH**

EasyZ-ESD

The EasyZ-ESD (feed socket) is used for feeding alternating voltage to the flat cable system via a screw connection. For use in dry rooms and UV-protected areas.

Extract from the technical data

- Plastic parts: halogen-free
- Metal parts: corrosion-protected
- Fire behaviour: UL94-V2
- Conductor cross-section: 3x2.5 mm²
- High-voltage current component
- Pivot screws: service torque 0.7 Nm
- Phillips-tip screwdriver no. 1
- Clamping screws: service torque 0.7 Nm
- Rated voltage: 250 V
- Test current: 24 A

Product: SCHAKO **EasyZ-ESD**

EasyZ-KST

The flat cable end piece EasyZ-KST must be attached to each cable beginning and end, to ensure that contact protection of the wires is guaranteed.

Extract from the technical data

Material: polycarbonate, halogen-free, transparent
Fire load: 0.06 kWh
Product**:** SCHAKO **EasyZ-KST**

SWITCH CABINETS

Switch cabinet (wall cabinet) EasyS-W31 to -W33

Switch cabinet (compact cabinet) according to degree of protection IP 66
Housing: Stable sheet steel construction consisting of 1.25 mm or 1.5 mm sheet steel, canted and welded from a single piece, with circumferential protective channel at the door opening, rear wall with countersunk bores for wall mounting support.
Housing bottom with sheet steel flange plates.
Door: 1.5-2 mm sheet steel, resting, with foamed seal, vertical mounting hole strips on both sides, screwed-down hinges. For single-door housings, change possible from right-hand to left-hand hinge, opening angle of 130° according to VDI (can be retrofitted to 180°). Sash lock with double-bit key insert according to DIN 43668
Mounting plate: 2-3 mm sheet steel with perforations, depth-adjustable on studs, galvanised.
Assembly: includes installation of all required components and wiring, including terminal strips for connecting external lines and cables up to a max. of three EasyS-M01 master units and one EasyS-H01 evaluation unit.
Surface finish: Metal sheets cleaned, degreased, phosphated, dip-primed by electrophoresis and powder-coated with polyester powder RAL 7035.
Dimensions (BxHxT): 600x760x210 mm
Please select models according to order code.

Switch cabinet (wall cabinet) EasyS-W41 to -W42

Switch cabinet (compact cabinet) according to degree of protection IP 66
Housing: Stable sheet steel construction consisting of 1.25 mm or 1.5 mm sheet steel, canted and welded from a single piece, with circumferential protective channel at the door opening, rear wall with countersunk bores for wall mounting support.
Housing bottom with sheet steel flange plates.
Door: 1.5-2 mm sheet steel, resting, with foamed seal, vertical mounting hole strips on both sides, screwed-down hinges. For single-door housings, change possible from right-hand to left-hand hinge, opening angle of 130° according to VDI (can be retrofitted to 180°). Sash lock with double-bit key insert according to DIN 43668
Mounting plate: 2-3 mm sheet steel with perforations, depth-adjustable on studs, galvanised.
Assembly: includes installation of all required components and wiring, including terminal strips for connecting external lines and cables up to a max. of three EasyS-M01 master units, one EasyS-H01 evaluation unit, one EasyS-C96 controller and one EasyS-TP1 touch panel
Surface finish: Metal sheets cleaned, degreased, phosphated, dip-primed by electrophoresis and powder-coated with polyester powder RAL 7035.
Dimensions (BxHxT): 760x760x300 mm
Please select models according to order code.

Switch cabinet (stand-alone cabinet) EasyS-A53 to -A56

Single-door switch cabinet mounted on a stand according to protection type IP55
Housing: symmetrical stable profiled frame construction, consisting of rolled hollow profile with perforation in DIN dimension grid of 25 mm. All profiled edges are rounded off. Horizontal profiles with additional channel above the seal. Vertical profiles with two mounting planes for space-saving interior fittings. Four transport lugs, floor plate 3-fold division, mounted detachable and exchangeable.
Door: includes foamed seal, detachable square pipe frame with perforation in DIN dimension grid of 25 mm, rod lock 4-fold locked, double-bit insert to DIN 43668, hinges fitted on the right, exchangeable, including captive hinge pins, door opening angle 130 to VDI, retrofittable to 180 , floor clearance 25 mm.
Rear wall and roof sheet: includes foam seal, detachable

Mounting plate: C-canted laterally, depth-adjustable via integrated plastic sliding elements in a 25 mm grid. All screw-fastened panelling parts include automatic equipotential bonding and are prepared for attaching earthing strips.
Assembly: includes installation of all required components and wiring, including terminal strips for connecting external lines and cables up to a max. of six EasyS-M01 master units, two EasyS-H01 evaluation units, two EasyS-C96 controllers and one EasyS-TP1 touch panel
Material: 1.5 mm sheet steel, mounting plate made of 3 mm galvanised sheet steel.
Surface finish: dip-primed by electrophoresis
Outer faces powder-coated to RAL 7035
Plinth: consisting of mounted corner pieces at the front and rear and covers on the side. The plinth is divided into two parts for cable entry and has a height of 200 mm
Dimensions (B x H x T): 800x2000x400 mm
Please select models according to order code.

SAFETY INSTRUCTIONS

- Inspection, installation, connection and commissioning of the EasyBus components may be carried out by skilled personnel only in compliance with current regulations.
- The EasyBus components must not come into contact with liquids.
- The EasyBus components must not be operated with wet hands.
- Control and safety elements must not be modified without approval by the manufacturer or the regional sales representative.
- The electric connections and their proper functioning are the responsibility of the installer.

SCHAKO will not be responsible for any damage caused by:

- incorrect installation due to non-observance of the instructions of the present manual.
- installation and maintenance not carried out by skilled personnel.
- non-observance of the operating conditions of the EasyBus components.
- improper use of the EasyBus components or under inadmissible conditions according to the present manual.

WARRANTY

The warranty for the EasyBus components is two years from the acceptance date for manufacturing errors. This does not apply to the included electric components to which the warranty of the manufacturer in question applies. The warranty does not cover damage to the unit caused by components that do not belong to the equipment components. The warranty only covers the return and replacement of defective parts from the EasyBus portfolio.

RECYLING

Contact a certified electronic waste disposal company for environmentally friendly recycling and disposal of EasyBus components.