Additional operating instructions according to ATEX 2014/34/EU

Fig.: BKP-EN with X14 actuator + accessories

BKP-EN

Fire damper

USABILITY CERTIFICATES

- **Declaration of Performance**
  DoP-BKP-EN-2020-09-01

CLASSIFICATION AND STANDARDS

- **Classification**
  according to EN 13501-3, depending on the installation situation EI 90 (v_e, h_o i↔o) S to EI 120 (v_e, h_o i↔o) S
- **Product standard**
  EN 15650
- **Test standard**
  EN 1366-2

PERFORMANCE DATA

- For automatic locking of fire lobbies

SPECIAL FEATURES

- ATEX version (at an extra charge)
- Extensive uses and applications
- Housing leakage class C according to EN 1751

SCHAKO | Ferdinand Schad KG
Steigstraße 25-27
D-78600 Kolbingen

Phone +49 (0) 7463-980-0
Fax +49 (0) 7463-980-200
schako.com | info@schako.de

TABLE OF CONTENTS

GENERAL CONDITIONS

GENERAL DESCRIPTION AND INSTRUCTIONS

These additional operating instructions must be observed prior to mounting and commissioning the device.

These additional operating instructions contain basic information regarding its use in areas subject to explosion hazards to be observed during assembly, operation and functional check.

Prior to mounting and commissioning and during functional check, the present additional operating instructions must be read by the installer and the responsible skilled personnel/system operator!

The non-observance of the proper assembly and safety instructions will result in the loss of any claims for damages!

PERSONNEL QUALIFICATION AND TRAINING

The personnel for assembly, inspection and functional check must have the relevant qualification for this work. The area of responsibility, competence and monitoring of the personnel must be exactly regulated by the system operator. If the personnel does not have the required knowledge, it must be trained and instructed. Moreover, the system operator must ensure that the contents of the additional operating instructions are completely understood and adhered to by the personnel.

SAFETY-CONSCIOUS WORK

The safety instructions given in these additional operating instructions, the existing national and international regulations on explosion protection, accident prevention and the system operator's internal work, operating and safety regulations must be observed.

DESIGNATED USE

The devices have been designed for use in ventilation systems in areas subject to explosion hazards according to the ATEX marking "Device group II, Zones 1, 2 and 21, 22.

These devices are not suitable for use in unreleased Ex zones.

The operating safety of the delivered devices is only guaranteed when used in accordance with their designated use. The fire damper shall only be used for media that do not exceed a temperature of 72°C.

DELIVERY AND STORAGE

Upon receipt, the devices must be checked for completeness and transport damage. If the device was delivered incompletely or damaged, the forwarding company and the SCHAKO KG have to be informed immediately.

The fire dampers must not be exposed directly to weather, solar radiation and moisture (see also "General information").

MOUNTING INFORMATION

Mounting, electrical connection work and commissioning must be carried out by skilled personnel only and in accordance with the recognised technical rules and the safety and accident prevention regulations. In order to avoid the risk of static charges, the fire damper must be connected to the on-site equipotential bonding on the grounding connection provided for this purpose.

FUNCTIONAL TEST

Only a device subjected to proper check and kept in perfect condition can guarantee safe and reliable operation.

When defective parts are replaced with spare parts, only SCHAKO KG original spare parts may be used. The SCHAKO KG cannot be held liable for any damage caused by using spare parts that are not original and will not give any warranty.

HAZARD CAUSED BY NON-OBSERVANCE OF THE SAFETY INSTRUCTIONS

Non-observance of the safety instructions can result both in putting persons and the environment and operating units at risk.
Likewise, non-observance of the safety instructions will result in the loss of any claims for damages.

DESCRIPTION

Fire dampers, installed in ventilation ducts (air conditioning systems), serve for the automatic locking of fire lobbies. The fire damper BKP-EN conforms to EN 15650, EN 13501-3 and EN 1366-2. The BKP-EN has been tested according to EN 1366-2 in compliance with Declaration of Performance No. DoP-BKP-EN-2020-09-01. Its classification according to EN 13501-3 is EI 90 (v_e, h_o i↔o) S to EI 120 (v_e, h_o i↔o) S.
According to Directive 2014/34/EU, EC Certificate of Conformity Number EPS 13 ATEX 2 610 X, its use in areas subject to explosion hazards is permitted, not only with spring return actuator ExMax-5.10-BF (X14/X15), including safety temperature limiter (ExPro-TT), but also with mechanical release via fusible link (manual actuation with or without ATEX limit switch ES-Ex). The fire damper is marked as follows according to ATEX:

II 2 G Ex h IIC T6 Gb
II 2 D Ex h IIIC T80°C Db
EPS 13 ATEX 2 610 X

The national standards and guidelines must be observed in connection with these additional operating instructions.
For functional test, service, retrofitting, etc., inspection openings must be provided on site in suspended ceilings, shaft walls, connected ventilation ducts etc., if necessary. They must be built in in sufficient numbers and sizes and must not impair the functioning of the fire dampers.
The fire dampers must be connected to the ventilation system by means of ventilation ducts either on one or on both sides. When connected on one side, security grille made of non-flammable building materials (EN13501-1) must be provided on the opposite side. The fire dampers can be connected to non-flammable and flammable ventilation ducts as well as to flexible spigots.

The fire damper complies with the regulations of the ATEX directives and may be used in supply and return air installations of ventilation systems in areas subject to explosion hazards.

The fire damper is certified for device group II, Zones 1, 2 and 21, 22.
Zones 1 and 2 represent the application range containing gases/vapours, while Zones 21 and 22 represent the application range containing dusts.

Classification by zone must be established by the system operator or planner in compliance with current standards.

Note:
In explosion-protected zones, only devices that have an ATEX approval for this use may be used. It rests with the operator to ensure that the products are only used in zones specified by the product marking.

SPECIAL CONDITIONS

The attached and installed electrical devices must have a suitable explosion-proof design.
It must be ensured that all metal components are properly and permanently connected to the ground potential.

TYPE OF IGNITION PROTECTION

The type of ignition protection of the fire dampers is guaranteed by their safe design.

QUALITY ASSURANCE

The SCHAKO production facilities are certified according to the QM procedure EN ISO 9001.
To ensure that the defined product features are adhered to during the production, a factory production control is carried out at regular intervals. In addition, a notified body carries out an external audit once a year.

MODELS AND DIMENSIONS

Dimensions

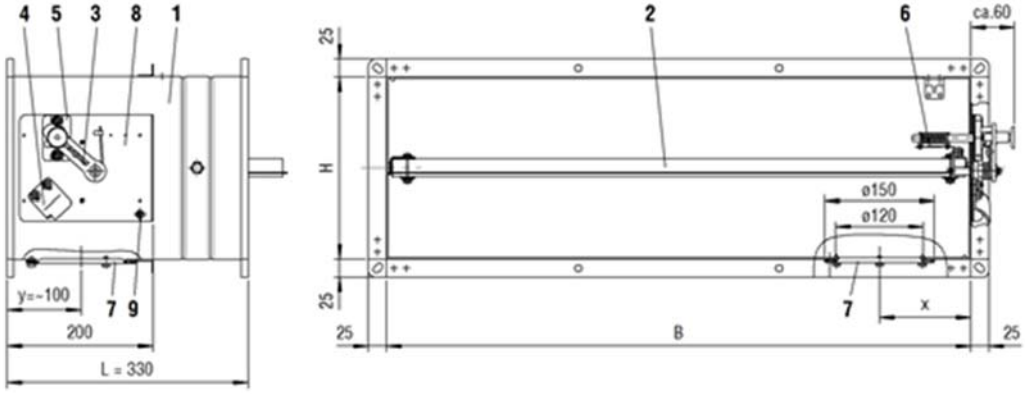

Figure 1: Dimensions BKP-EN

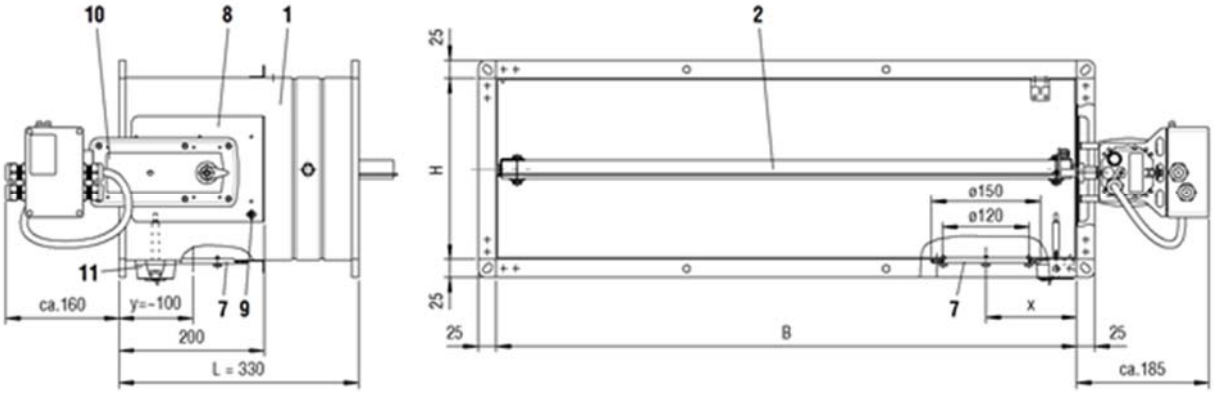

Figure 2: Dimensions of BKP-EN with actuator ExMax-5.10-BF (X14/X15)

1 Housing
2 Damper blade
3 Hand lever
4 Locking profile
5 Release device
6 Fusible link
7 Inspection opening from B ≥ 200, for B < 200 no inspection opening possible.
200 ≥ B < 600 ➔ x = B/2
B ≥ 600 ➔ x ~ 125mm
y ~ 100 mm from the connection flange
Arranged at the bottom (standard)
8 Actuator unit
9 Earthing connection
10 Actuator ExMax-5.10-BF (X14/X15)
11 Safety temperature limiter

Available sizes [mm]

Breite (B)	Höhe (H)
100	100
150	125
200	150
250	160
300	175
400	200
500	225
600	250
700	
800	

Table 1: Available sizes [mm]

- Housing length L = 330 mm.
- (Exclusively) right-hand design
- All heights and widths which can be combined are available!
- Trigger device always on H side
- Inspection opening from B ≥ 200, always on B side (bottom)
- Intermediate sizes on request

Weight table [kg]

BKP-EN with mechanical-thermal release
(manual release)
(added weight for actuator ExMax-5.10-BF (X14/X15) max. approx. 4.5 kg)

Höhe [mm]	Breite [mm] 100	150	200	250	300	400	500	600	700	800
100	3.3	3.6	4.1	4.4	4.9	5.5	6.5	7.4	8.2	9
125	3.4	3.8	4.3	4.8	5.2	6.1	7.1	7.7	8.8	9.6
150	3.6	4.1	4.6	5	5.4	6.4	7.3	8.3	9.1	9.8
160	3.7	4.2	4.7	5.1	5.5	6.6	7.6	8.7	9.4	10.1
175	3.9	4.3	4.8	5.2	5.6	6.8	7.8	8.9	9.6	10.4
200	4.1	4.6	5	5.6	6	7.2	8.2	9.2	10.2	11
225	4.3	4.8	5.2	5.9	6.3	7.5	8.3	9.4	10.5	11.8
250	4.4	4.9	5.3	6.1	6.4	7.6	8.4	9.7	10.8	12.7

Table 2: Weight tables [kg]

Electric spring return actuator ExMax-5.10-BF (X14/X15)

ExMax-5.10-BF (X14/X15)

Connection	ExMax-5.10-BF (X14/X15)

Open/closed 1-wire spring return + Ex-i circuit SB 7.0

BSK

integrated, permanently set auxiliary switch, max. 24V/3A, 240V/0.5A switching at an angle of rotation 5° and 85°. **The voltage on the auxiliary switch must be identical to the supply voltage and protected by an identical fuse.**

Ex-i circuit for passive, potential-free pushbuttons provided by the customer and thermally activated safety release device (type **ExPro-TT**)

24…240 VAC/DC

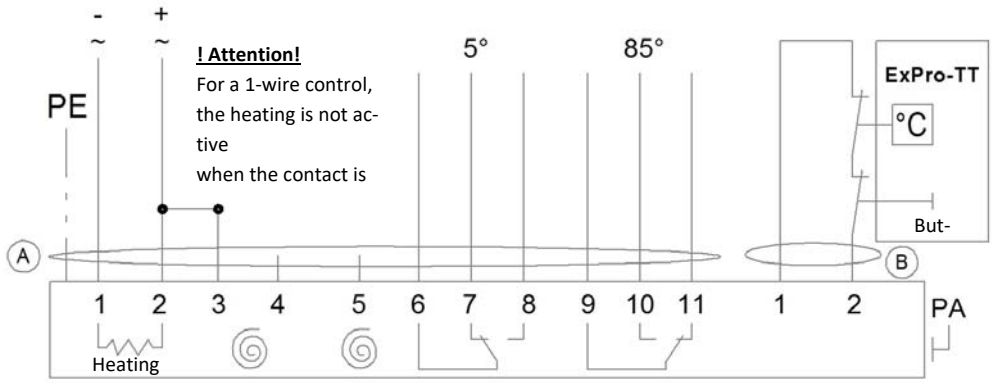

Standard connection = spring return in ~ 10 sec.

Figure 3: Circuit diagram actuator ExMax-5.10-BF (X14/X15)

Electric explosion-protected spring return actuators with safety temperature limiter (ExPro-TT).

- Release temperatures 72 °C.
- Operating position (damper "OPEN") and tensioning of the return spring by applying the supply voltage (universal power supply 24 - 240 VAC/DC)
- Safety position (damper "CLOSED") through spring force when supply voltage is interrupted or the temperature fuses (room temperature or internal duct temperature) respond. A response of the thermal fuses will interrupt the sensor circuit permanently and irrevocably.
- End position signalling by integrated auxiliary switches, switching at an angle of rotation of 5° and 85°.
- An on-site functional check is possible by means of the control key of of the safety temperature limiter

Attention!
Safety function is only guaranteed if the actuator has been connected to the supply voltage in accordance with regulations.

Technical data actuator ExMax-5.10-BF (X14/X15)

Power supply	24…240 V AC/DC, ± 10% each, self adaptable
Frequency	50...60 Hz ± 20%
Power consumption	
Holding	max. 20 W
Heating capacity	approx. 16 W
Current on making	approx. 2.0 A at 24 V for approx. 1 sec.
Running time Motor	30s
Spring return	10s
Auxiliary switch	2 integrated, permanently set, potential-free auxiliary switches with changeover contact
Switching voltage	24 V DC / 230 V AC
Switch voltage	0.5 mA - 3 A
Switching points	Angles of rotation: 5° / 85°
Protection class	I (earthed)
Protection type according to DIN 60 529	IP66
Tested according to EMC	2004/108/EC
Safety tested	2006/95/EC
Ambient temperature (operation)	-40 ... +40°C
Ambient humidity	≤ 95%, non-condensing

Table 3: Technical data actuator ExMax-5.10-BF (X14/X15)

LIMIT SWITCH TYPE ES-EX

Limit switch for application in areas subject to explosion hazards

Ex II 2G Ex d IIC T6/T5 Gb,

Ex II 2D Ex tb IIIC T 80°C/ 95°C Db

IP65; 250V / 6A AC15; 230V / 0.25A DC13; -20°C ≤ Ta ≤ +65°C

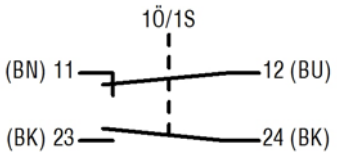

Figure 4: Circuit diagram limit switch type ES-Ex

Damper positions that can be displayed:
EXZ (type ES-Ex-Z: "CLOSED")
EXA (type ES-Ex-A: "OPEN")
EX2 (type ES-Ex-2: "OPEN" and "CLOSED")

General information

- During mounting or installation, there is a risk of injuries. To avoid any possible injuries, personal protective equipment (PPE) must be worn.
- Fire dampers must be installed such that external forces do not impair their permanent functioning.
- Ventilation ducts must not exert significant forces on walls, supports or ceilings and thus also on fire dampers as a result of thermal expansion (in case of fire).
  Appropriate compensation measures, such as the arrangement of flexible spigots (SCHAKO type FS) or a suitable duct routing (duct angles and distortions), must be taken as required. National regulations must be observed and implemented
- Prior to installing the fire damper, the possible connections of the ventilation ducts must be checked. Extension parts (on site or as accessories SCHAKO type VT) might be necessary, e.g. for large wall and ceiling thicknesses. When connecting duct components, a fastening type must be selected that causes no damage to the fire damper or its accessories.
- During mounting it may be required to provide reinforcements for the housing or the like.
- The requirement of statically load-bearing lintels may have to be taken into consideration.
- If a fire damper is not filled with mortar on all four sides, installation and mounting aids on site must be removed.

- Improper transport/handling may result in damage/functional impairment. In addition to that, the film of the transport packaging must be removed and the delivery inspected for completeness.
- In storage, fire dampers must be protected from dust, dirt, moisture and the effects of temperature (e.g. direct sunlight, heat-emitting light source, etc.). They must not be exposed to direct effects of the weather and must not be stored below -20 °C or above 50 °C.
- The fire damper must be protected from dirt and damage. After installation is complete, any dirt must be removed immediately.
- Enough space must be provided for installation, mortar lining, etc.
- Carry out a functional check of the fire damper before and after mounting and ensure ready access.
- Electrical installations or work on electrical components may only be carried out by skilled electricians. The supply voltage must be switched off when performing this work and secured against being switched on again.
- We would like to point out that only suitable cleaning materials may be used for cleaning fire dampers in stainless steel design!

Information regarding assembly and commissioning

Prior to being installed in the ventilation system, the fire damper must be checked for damage. Damaged fire dampers must not be installed.

The device may only be used in accordance with its designated use in air ventilation systems for supply air and return air.

Use only approved fastening material for mounting.

No additional parts may be
fastened to the fire damper.

The fire damper must be connected to the ventilation duct network on both sides in electrically conducting fashion.

In order to avoid the risk of static charges, the fire damper must be connected to the on-site equipotential bonding on the grounding connection provided for this purpose.

Make sure that the ventilation systems are not subjected to any anomalous operating conditions, such as vibrations, pressure surges or high proportions of solids in the medium.

Information regarding functional check and inspection

Proper functional check increases operational safety and the service life of the device. This is why the devices should be subjected to regular inspection.

If inspection dates are prescribed by law, they must be complied with.

The operating personnel must be informed, prior to starting functional check and inspection work.

The personal safety measures must be looked up in the safety data sheet. Hazard caused by contact or inhaling hazardous substances must be excluded by taking appropriate safety measures.

Prior to functional check or inspection, all system components up- and downstream of the device must be switched off and secured against being switched on again.

The following inspection criteria must be observed:
- Visual inspection of the device
- Check the fastening of the device
- Check the electrical connections
- Check the grounding connection for tight fit and good contact
- Functional control
- For additional inspections, please refer to the technical documentation or additional instructions for functional check

Use and electrical connection of actuators in areas subject to explosion hazards

Only ATEX-approved electrical equipment according to ATEX Directive 2014/34/EU for the zones 1, 2, 21, 22, such as actuators, terminal boxes and thermocouples according to our specifications may be used for SCHAKO KG devices.

The connection lines must be installed for permanent use and in such a way that they are sufficiently protected from mechanical and thermal damage.

Devices with explosion-protected actuators and terminal boxes have to be attached over the external potential connecting terminal to the potential equalisation provided by the customer with at least 4 mm² cooper solid-core.

The electrical connection lines of the actuators
must be connected in a terminal box according to ATEX Directive 2014/34/EU for the zones 1, 2, 21, 22, if the electrical connection is made in an explosive area.

The dimensioning of the conductor cross-sections must be observed.

The actuators are maintenance-free with respect to their function, but the test specifications according to ATEX directives
or factory regulations must be observed.

TYPE PLATE

Figure 5: BKP-EN type plate

ORDER CODE

01	02	03	04	05	06
Type	Width	Height	Length	Material (housing)	Coating (housing)
Example					
BKPEN	-800	-250	-330	-V2	-1

07	08	09	10	11
Damper blade version	Release temperature	Actuator type	Accessories	Additional frame
-2	-72	-X15	-KK2	-R05

EXAMPLE
BKPEN-800-250-330-V2-1-2-72-X15-KK2-R05
Type **BKPEN** = fire damper BKP-EN | Width = **800** mm | Height = **250** mm | Length = **330** mm | Material (housing) **V2** = stainless steel material no. 1.4301 (V2A) | Coating (housing) **1** = DD coating inside | Damper blade version **2** = coated with DD paint | Release temperature **72** = 72 °C | Actuator type **X15** = type ExMax-5.10-BF (housing V4A) | Accessories **KK2** = terminal box (V4A) with mounting console | Additional frame **R05** = installation frame ER-P1

ORDER DETAILS

01 - TYPE

BKPEN = BKP-EN

02 - WIDTH

100 - 150 - 200 - 250 - 300 - 400 - 500 - 600 - 700 - 800
in mm - always three digits

03 - HEIGHT

100 - 125 - 150 - 160 - 175 - 200 - 225 - 250
in mm - always three digits

04 - LENGTH

330
in mm - always three digits

05 – MATERIAL (HOUSING)

SV = Galvanised sheet steel (standard)
V2 = Stainless steel material no. 1.4301 (V2A)

06 – COATING (HOUSING)

0 = without paint (standard)
1 = DD coating, inside (RAL7035)
3 = DD coating inside and outside (RAL7035)

07 - DAMPER BLADE VERSION

0 = without coating (standard)
2 = DD coating

08 – RELEASE TEMPERATURE

72 = 72 °C (standard)

09 - ACTUATOR TYPE

HAX = thermo-mechanical manual release *(standard)
X14 = ExMax-5.10-BF + safety temp. limiter (ExPro-TT) 72 °C *
X15 = ExMax-5.10-BF (housing made of stainless steel V4A) + safety temp. (ExPro-TT) 72 °C *

** suitable for all dimension combinations*

10 - ACCESSORIES

Z00 = without accessories (standard)
EXZ = ES-Ex-Z (limit switch Closed; suitable for HAX)
EXA = ES-Ex-A (limit switch Open; suitable for HAX)
EX2 = ES-Ex-2 (limit switch Open/Closed; suitable for HAX)
KK1 = terminal box with mounting console; suitable for X14
KK2 = terminal box with mounting console (housing made of stainless steel V4A); suitable for X15

11 – ADDITIONAL FRAME

R00 = without additional frame (standard)
R05 = installation frame ER-P1 [II)]
R06 = installation frame ER-P1 [I)]

[I)] Additional frame supplied loose
[II)] Additional frame mounted ex works

CERTIFICATE OF CONFORMITY

(1) **Konformitätsbescheinigung**

(2) Geräte und Schutzsysteme zur bestimmungsgemäßen Verwendung in explosionsgefährdeten Bereichen – **Richtlinie 2014/34/EU**

(3) Bescheinigungsnummer

EPS 13 ATEX 2 610 X **Revision 2**

(4) Gerät: Brandschutzklappe BKP-EN

(5) Hersteller: Schako KG

(6) Anschrift: Steigstraße 25-27
78600 Kolbingen
Deutschland

(7) Die Bauart dieses Gerätes sowie die verschiedenen zulässigen Ausführungen sind in der Anlage zu dieser Konformitätsbescheinigung festgelegt.

(8) Bureau Veritas Consumer Products Services Germany GmbH bescheinigt aufgrund einer freiwilligen Prüfung auf Basis der Richtlinie 2014/34/EU des Europäischen Parlaments und des Rates vom 26. Februar 2014 die Erfüllung der grundlegenden Sicherheits- und Gesundheitsanforderungen für die Konzeption und den Bau von Geräten und Schutzsystemen zur bestimmungsgemäßen Verwendung in explosionsgefährdeten Bereichen gemäß Anhang II der Richtlinie. Die Ergebnisse der Prüfung sind in der vertraulichen Dokumentation unter der Referenznummer 13TH0460 festgelegt.

(9) Die grundlegenden Sicherheits- und Gesundheitsanforderungen werden erfüllt durch Übereinstimmung mit:

EN ISO 80079-36:2016 **EN ISO 80079-37:2016**

(10) Falls das Zeichen „X" hinter der Bescheinigungsnummer steht, wird auf besondere Bedingungen für die sichere Anwendung des Gerätes in der Anlage zu dieser Bescheinigung hingewiesen.

(11) Diese Konformitätsbescheinigung bezieht sich nur auf Konzeption und Prüfung des festgelegten Gerätes gemäß Richtlinie 2014/34/EU. Weitere Anforderungen dieser Richtlinie gelten für die Herstellung und das Inverkehrbringen dieses Gerätes. Diese Anforderungen werden nicht durch diese Bescheinigung abgedeckt.

(12) Die Kennzeichnung des Gerätes muss die folgenden Angaben enthalten:

Ex II 2G Ex h IIC T6 Gb

Ex II 2D Ex h IIIC T80°C Db

Zertifizierungsstelle Explosionsschutz

Hamburg, 08.04.2020

H. Schaffer

Seite 1 von 2

Bescheinigungen ohne Unterschrift und Siegel haben keine Gültigkeit. Diese Bescheinigung darf nur unverändert weiterverbreitet werden. Auszüge oder Änderungen bedürfen der Genehmigung von Bureau Veritas Consumer Products Services Germany GmbH. EPS 13 ATEX 2 610 X, Revision 2.

BUREAU VERITAS
Consumer Products Services Germany GmbH
Oehleckerring 40, 22419 Hamburg, Germany
Phone: +49 40 74041-0
cps-hamburg@de.bureauveritas.com
www.bureauveritas.de/cps

(13) **Anlage**

(14) **Konformitätsbescheinigung EPS 13 ATEX 2 610 X** **Revision 2**

(15) Beschreibung des Gerätes:

Die Brandschutzklappe Typ BKP-EN dient zur Absperrung gegen Feuer und Rauch in einer Lüftungsanlage.

(16) Referenznummer: 13TH460

(17) Besondere Bedingungen:

Die an- und eingebauten elektrischen Geräte müssen in geeigneter Weise explosionsgeschützt ausgeführt sein.

Es muss sichergestellt werden, dass alle metallischen Teile ordnungsgemäß und dauerhaft mit dem Erdpotential verbunden sind.

(18) Grundlegende Sicherheits- und Gesundheitsanforderungen:

Durch Übereinstimmung mit Normen abgedeckt.

Zertifizierungsstelle Explosionsschutz Hamburg, 08.04.2020

H. Schaffer

Seite 2 von 2

Bescheinigungen ohne Unterschrift und Siegel haben keine Gültigkeit. Diese Bescheinigung darf nur unverändert weiterverbreitet werden. Auszüge oder Änderungen bedürfen der Genehmigung von Bureau Veritas Consumer Products Services Germany GmbH. EPS 13 ATEX 2 610 X, Revision 2.

BUREAU VERITAS
Consumer Products Services Germany GmbH
Oehleckerring 40, 22419 Hamburg, Germany
Phone: +49 40 74041-0
cps-hamburg@de.bureauveritas.com
www.bureauveritas.de/cps

FOREIGN BRANCH OFFICES

Belgium SCHAKO S.A.R.L. 165, rue des Pommiers L-2343 Luxembourg Phone: +352 / 403 157 1 Fax: +352 / 403 157 66 info@schako.be www.schako.be	**Denmark** Venti AS Banevænget 3 8362 Hørning Phone: +45 / 86 92 22 66 Fax: +45 / 86 92 22 26 info@venti.dk www.venti.dk	**England** SCHAKO Ltd. Index House St Georges Lane, Ascot SL5 7EU Berkshire Phone: +44 / 13 44 63 63 89 Fax: +44 / 13 44 87 46 58 admin@schako.uk.com www.schako.co.uk	**France** SCHAKO s.a.r.l. 16 Boulevard de la Croix Rousse F-69001 Lyon Phone: +33 / 4 / 78 34 97 34 Fax: +33 / 4 / 78 34 97 31 contact@schako.fr www.schako.fr
Greece EUROPERSIS Odisea Androutsou 2 GR-56224 Evosmos/Tessaloniki Phone: +30 / 310 / 68 57 79 Fax: +30 / 310 / 75 76 13 info@europersis.gr www.europersis.gr	**Israel** Insupco Industrial Supply Ltd. 40 Hayarkon St. Yavne 811 00 Phone: +972 / 8 / 94 20 080 Fax: +972 / 8 / 94 20 311 insupco@netvision.net.il www.insupco.com	**Italy** SCHAKO Italia S.r.l. Via XXV Aprile, 17 20097 S.Donato Milanese-MI Phone: +39 / 02 / 51 64 02 01 Fax: +39 / 02 / 51 62 09 46 info@schako.it www.schako.it	**Croatia** Intel Trade Dr. Ante Mandica 10 HR-51410 Opatija Phone: +385 / 51 741 100 Fax: +385 / 51 701 470 ri@intel-trade.hr www.intel-trade.hr
Luxembourg SCHAKO S.A.R.L. 165, rue des Pommiers L-2343 Luxembourg Phone: +352 / 403 157 1 Fax: +352 / 403 157 66 info@schako.lu www.schako.lu	**Netherlands** SCHAKO S.A.R.L. 165, rue des Pommiers L-2343 Luxembourg Phone: +352 / 403 157 1 Fax: +352 / 403 157 66 Info@schako-nederland.nl www.schako-nederland.nl	**Austria** SCHAKO Vertriebs GmbH Mariahilfer Straße 103/1/TOP 12 A-1060 Wien Phone: +43 / 1 / 890 24 62 Fax: +43 / 1 / 890 24 62 50 info@schako.at www.schako.at	**Poland** SCHAKO Polska Sp. z o.o ul. Pulawska 38 PL-05-500 Piaseczno Phone: +48 / 22 / 7263570 Fax: +48 / 22 / 7263571 info@schako.pl www.schako.pl
Romania SCHAKO Klima Luft SRL Str. Elena Caragiani nr.21 014212 Bucuresti, Phone: +40 / 0 / 21 / 232 13 75 Fax: +40 / 0 / 21 / 232 13 75 info@schakoromania.ro www.schako.ro	**Sweden** EXOTHERM AB Box 60036 21610 Limhamn Phone: +46 / 40 / 631 61 16 Fax: +46 / 40 / 15 60 95 info@exotherm.se www.exotherm.se	**Switzerland** SCHAKO Suisse SA Rue Jean-Prouvé 28 1762 Givisiez Phone: +41 / 26 / 460 88 00 Fax: +41 / 26 / 460 88 05 schako@schako.ch www.schako.ch	**Serbia & Montenegro** TERMOMEHANIKA d.o.o. Koste Glavinica 2 RS-11000 BEOGRAD Phone: +381 / 11 / 369 99 93 Fax: +381 / 11 / 369 09 93 termomehanika@sbb.rs www.termomehanika.rs
Slovakia SCHAKO SK s.r.o. Modrová 187 91635 Modrová Phone: +421 / 337 / 774 1843 Fax: +421 / 337 / 774 1843 schako@schako.sk www.schako.sk	**Spain** SCHAKO IBERIA S.L. Departamento de Ventas Pol. Ind. Río Gállego, Calle B, nave 3 50840 San Mateo de Gállego / Zaragoza Phone: +34 / 976 / 531 999 Fax: +34 / 976 / 690 709 ventas@schako.es www.schako.es	**Czech Republic** SCHAKO s.r.o. Pred Skalkami II. 184/5 CZ-10600 Praha 10-Zabehlice Phone: +42 / 02 / 727 680 43 Fax: +42 / 02 / 727 693 94 info@schako.cz www.schako.cz	**Turkey** EMO-SCHAKO Klima Havalandirma San. ve Tic. Ltd. Sti. Pursaklar Sanayi Sitesi, Karacaören Mah.1638.Cad. No:98 06145 Altindag - Ankara Phone: +90 / 312 527 16 05 Fax: +90 / 312 527 16 08 emo@emo-schako.com.tr www.emo-schako.com.tr
Hungary SCHAKO Kft. Tó Park 6 H-2045 Törökbálint Phone: +36 / 23 / 445670 Fax: +36 / 23 / 445679 e-mail@schako.hu www.schako.hu			

LIST OF FIGURES/TABLES

List of figures

List of tables