Weather protection grilles

ALAS

Ferdinand Schad KG
Steigstraße 25-27
D-78600 Kolbingen
Telephone +49 (0) 74 63 - 980 - 0
Fax +49 (0) 74 63 - 980 - 200
info@schako.de
schako.com

Weather Protection Grille ALAS

Contents

Weather Protection Grille ALAS

Description

External air intake or return air grille with fixed, rain-repellent blades and back-fitted wire mesh grid. Mounting holes drilled as standard.
On request, all designs with mounting frames made of angular 30/30/3 steel are primed.

ALAS with self-regulating heating strip
A better way of preventing ice formation is the installation of a self-regulating heating strip. It is a heating strip that adapts the heating output to the environment at any position of the grille. Available in any length, rated capacity max. 36 W/m. It can be used up to -8 °C and 80% of relative humidity.

ALAS with self-regulating "top" heating strip
A better way of preventing ice formation is the installation of a self-regulating heating strip. It is a heating strip that adapts the heating output to the environment at any position of the grille. Available in any length, rated capacity max. 64 W/m. It can be used up to -15 °C and 80% of relative humidity.

Self-regulating heating strip
The heating unit consists of semi-conductive, cross linked plastic with two stranded copper conductors. As soon as ice is formed, a current will flow through the heating element and generate heat. As soon as parts of the heating strip have defrosted and dried, the temperature rises on these parts and the resistance increases. This will minimise the current flow and the heating output.

Construction

Blades
- Galvanised sheet steel
- Natural aluminium
- Natural colour anodised aluminium (E6/EV1)
- Copper

Wire mesh grille
- Galvanised steel
- Stainless steel 1.4301 (V2A)

Frame
- Galvanised sheet steel
- Natural aluminium
- Natural colour anodised aluminium (E6/EV1)
- Copper

Model

ALAS	-	Sheet steel design
ALAS-Alu	-	Aluminium design
ALAS-Cu	-	Copper design

Accessories

Installation frame
- Angular steel primed and perforated (unperforated if pre-ordered)

Heating strip
- plastic
- It can be used up to-8 °C and 80% of relative humidity.

"Top" heating strip
- plastic
- It can be used up to-15 °C and 80% of relative humidity.

Attention!
We would like to point out that for cleaning stainless steel models, only suitable cleaning materials may be used!

Weather Protection Grille ALAS

Models and dimensions

Dimensions

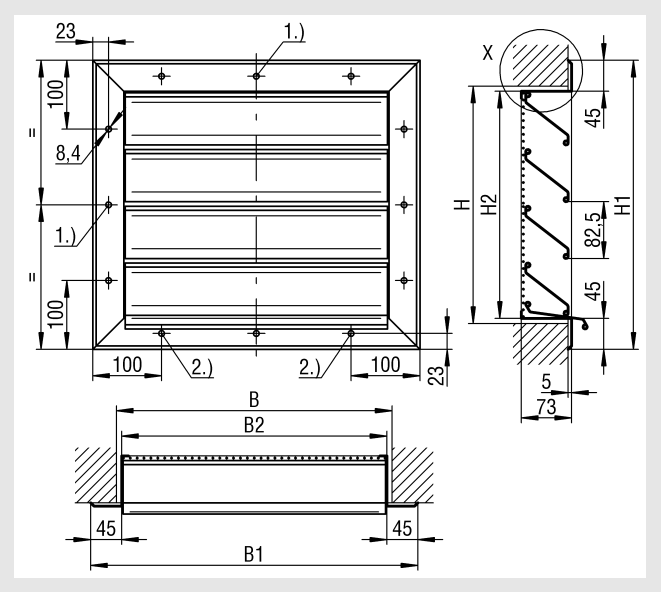

Available sizes

B	B1	B2	H	H1	H2
400	475	389	**345**	420	338
600	675	589	**510**	585	503
800	875	789	**675**	750	668
1000	1075	989	**840**	915	833
1200	1275	1189	**1005**	1080	998
1400	1475	1389	**1170**	1245	1163
1600	1675	1589	**1335**	1410	1328
1800	1875	1789	**1500**	1575	1493
2000	2075	1989	**1665**	1740	1658
			1830	1905	1823
			1995	2070	1988

All combined widths and heights available!

1.) from height or width ≥ 1600, 3 fixing holes per side
2.) additional holes for widths ≥ 900

Detail X
ALAS / ALAS-Cu

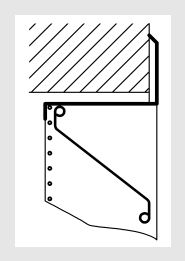

ALAS-Alu

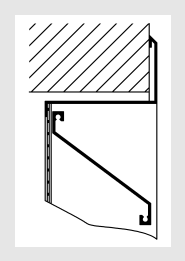

Installation arrangement for sectioned design at height > 1995

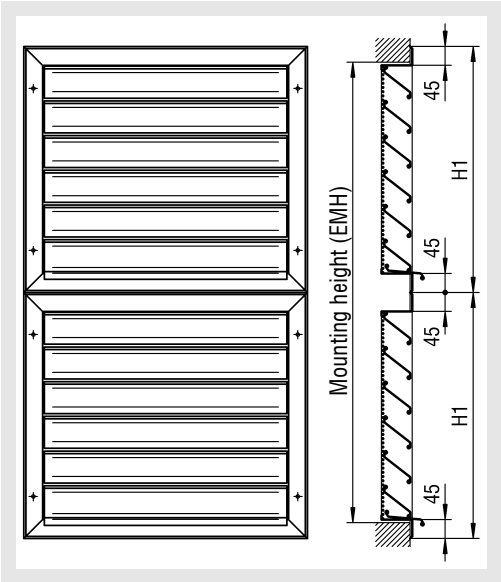

For a height of > 1995 two standard surrounding air suction grilles must be installed, one on top the other.

Installation height (EMH):
"EMH=(H1xa)-(2x45)+15"
a = Number of grilles

for widths > 2000

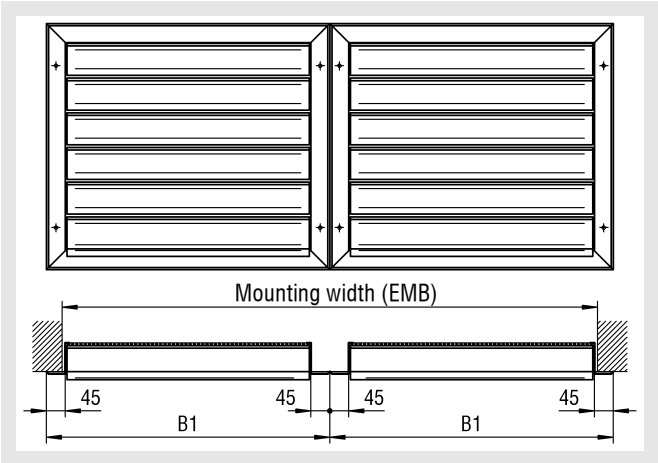

For a width of > 2000 two standard surrounding air suction grilles must be installed next to each other.

Installation width (EMB):
"EMB=(B1xa)-(2x45)+15“
a = Number of grilles

Weather Protection Grille ALAS

Position of fixing holes for band design

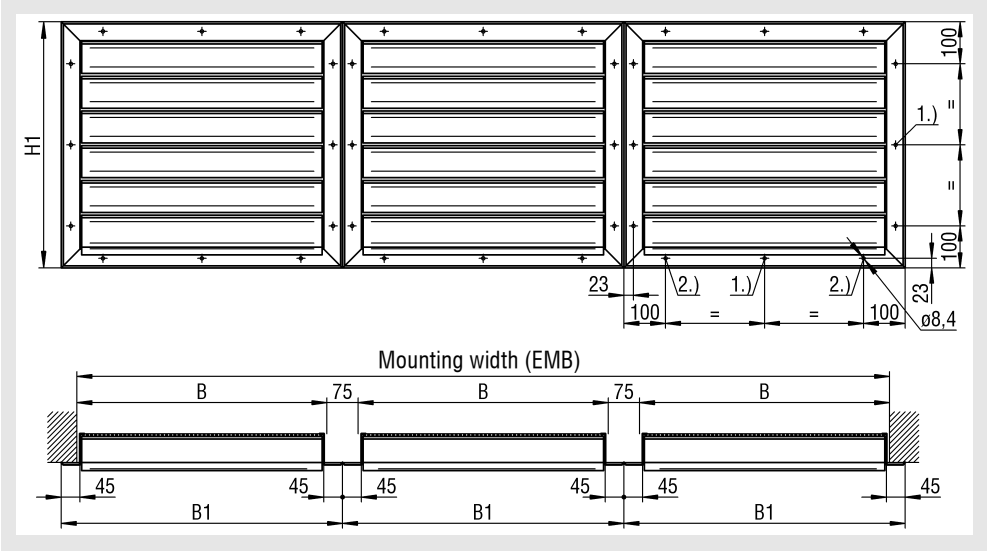

The illustration shows the grilles as continuous run. Any number of grilles can be installed next to each other. Expansion joints have to be allowed when fixing air suction grilles on site.
On request, a mounting frame made of angular steel 30/30/3 can be delivered primed (at an extra charge).

1.) from a height or width ≥ 1600, 3 fixing holes per side
2.) additional holes for widths ≥ 900

Dimensions of accessories

Mounting frame (-ER)

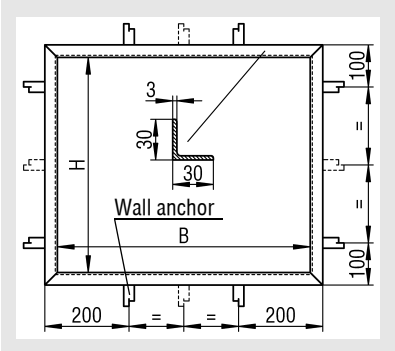

Mounting frame for band design

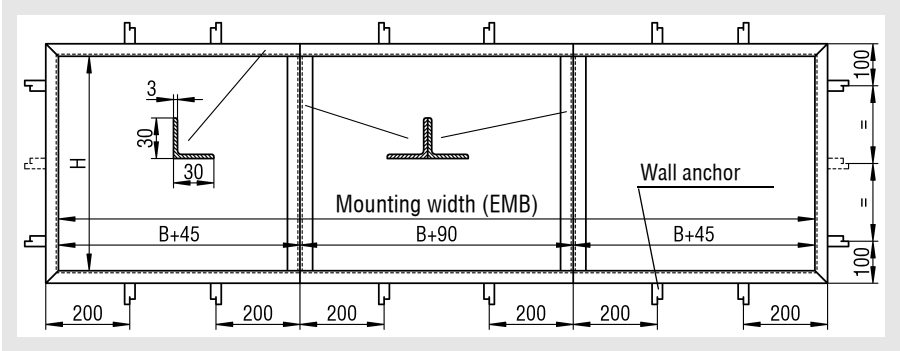

Installation in front of the wall

ALAS / ALAS-Cu

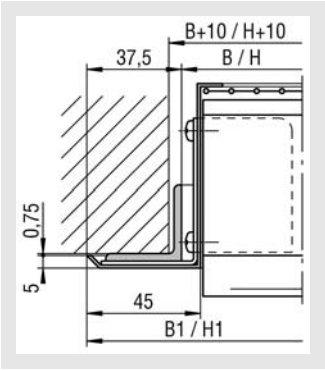

ALAS-Alu

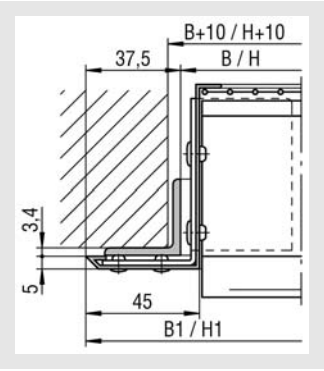

Installation in wall (mortar)

ALAS / ALAS-Cu

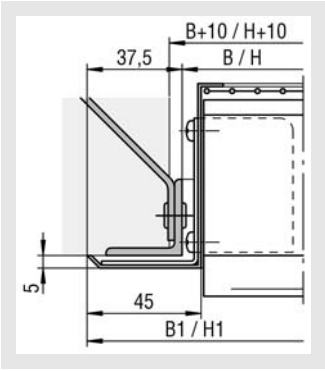

ALAS-Alu

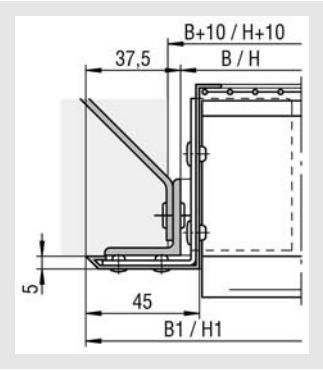

Number of wall anchors for mounting frame

Height:
H ≤ 1000 = 2 wall anchors per side
1000 < H ≤ 2000 = 3 wall anchors per side

Width:
B ≤ 800 = without wall anchors
800 < B ≤ 1000 = 2 wall anchors per side
1000 < B ≤ 2000 = 3 wall anchors per side

If the mounting frame is shipped beforehand, it will be delivered unperforated.
A mounting frame in sectioned design must be screwed together on site.

Weather Protection Grille ALAS

Mounting detail ALAS with mounting frame

Height one-piece

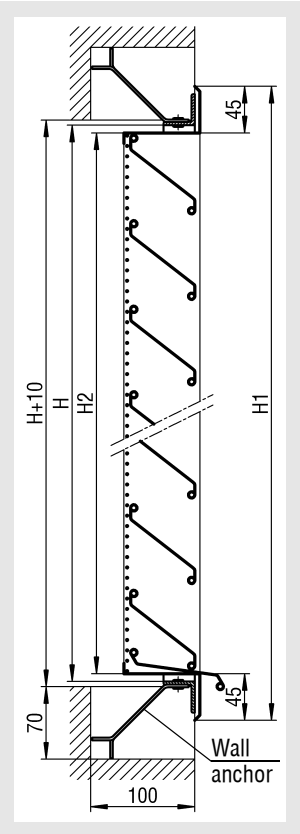

Sectioned height

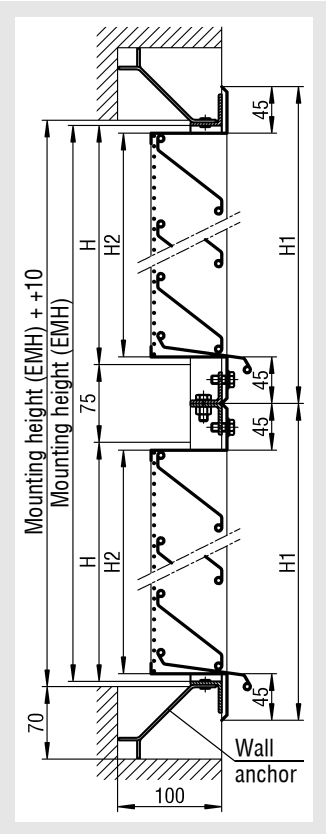

Sectioned width

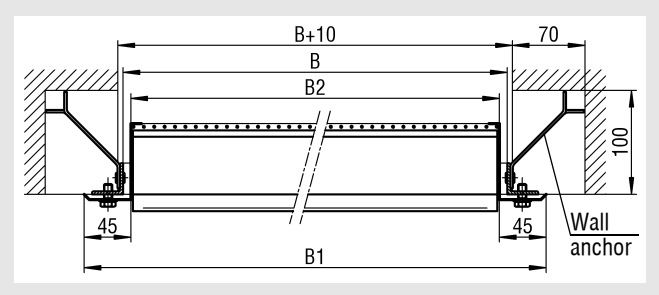

Sectioned width

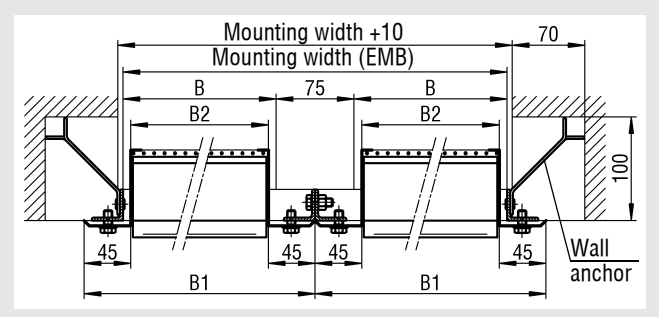

Fixing lugs

(not removable from the outside)

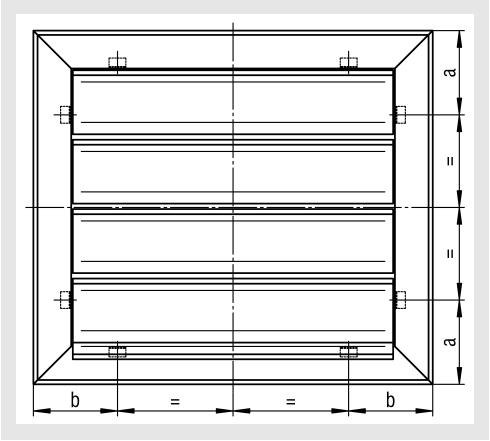

Sectioning of fixing lug

Height:

H ≤ 800 ⇒ a=100 ⇒ 2 fixing lugs per side
800 < H ≤ 1100 ⇒ a=140 ⇒ 2 fixing lugs per side
1100 < H ≤ 1800 ⇒ a=230 ⇒ 2 fixing lugs per side
1800 < H ≤ 2000 ⇒ a=230 ⇒ 3 fixing lugs per side

Width:

B ≤ 900 ⇒ b= ---- ⇒ no fixing lug
900 < B ≤ 1200 ⇒ b=140 ⇒ 2 fixing lugs per side
1200 < B ≤ 1800 ⇒ b=230 ⇒ 2 fixing lugs per side
1800 < B ≤ 2000 ⇒ b=230 ⇒ 3 fixing lugs per side

Separate fixing lugs

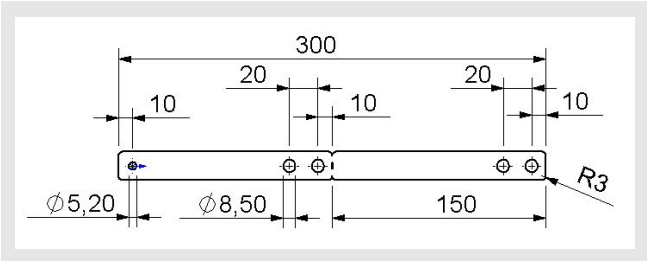

Mounting detail fixing lug

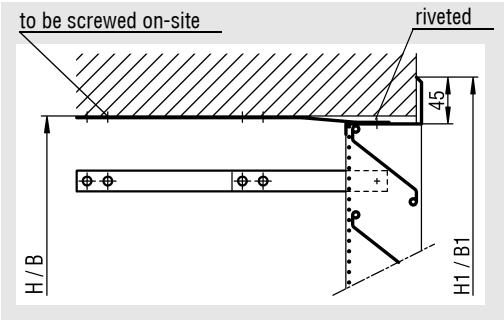

Weather Protection Grille ALAS

ALAS with heating strip

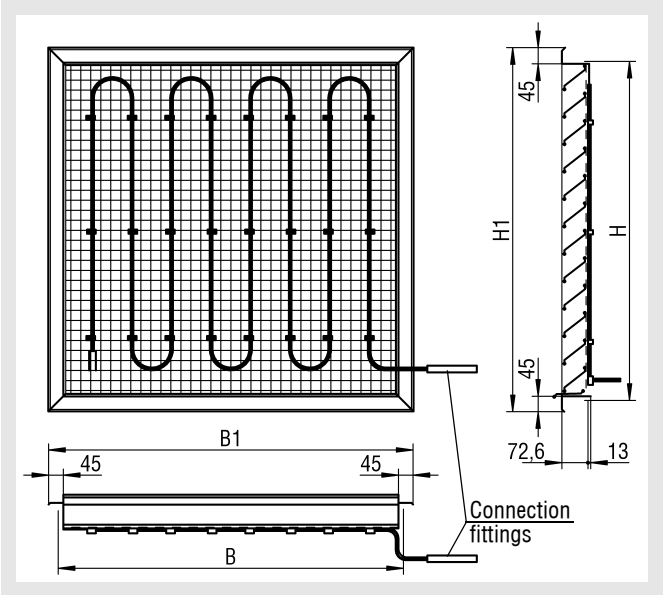

Per m² approx. 10 m of heating strip

Protective measures for ALAS with heating strip

1. Protection against too high contact voltage: residual current circuit breaker, nominal fault current 30 mA (according to VDE 0100/5.73 § 13)
2. Protection against atmospheric overvoltage:
   (according to VDE 0100/5.73 § 18 and the "General Lightning Protection Regulations", ABB, Ed. 68 § 8)
   a) with surge arresters according to VDE 0675/5.72
   b) It is also advisable to connect the heating elements via a plug-and-socket device. During the season in which atmospheric disturbances (e.g. thunderstorms) occur, disconnect the system from the power. Hang the plug together with all moving connections at a distance of min. 2 m from the power supply socket.

Connecting the heating strip

a) The electrical connection must be performed by a qualified electrician taking all protective measures into consideration!
b) The following rules and regulations must be observed:
   - VDE directives
   - Regulations of the local power supply company

Technical details regarding the heating strip

Structure

1. 1.2 mm² multi-strand copper conductor
2. Self-regulating, semi-conductive heating element
3. 0.7 mm electrical insulation made of modified polyolefin
4. Protection mesh made of galvanised copper leads
5. Outer casing made of modified polyolefin

Thermal safety class 0 according to VDE 0721 Part 2 E § 10

Technical data

Nominal voltage		230 V
Rated power		
- Ice-water:	at 0°C	36W/m
- Air:	at 0°C	18 W/m
max. resistance of protective mesh		0.0152 Ω/m
max. permitted surrounding temperature		
- switched on		+ 65 °C
- switched off		+ 85 °C

Note

- The heating strip protective mesh must be connected to a protective conductor potential.
- Provide FI residual current protective device
- When used on metal, it must be included in the protective measures.
- Protective measures and protection from contact have to be ensured during installation.
- **End of heating strip not heated connection spigot fitting**
- The heating strips are fitted during manufacture.

Weather Protection Grille ALAS

ALAS with "top" heating strip

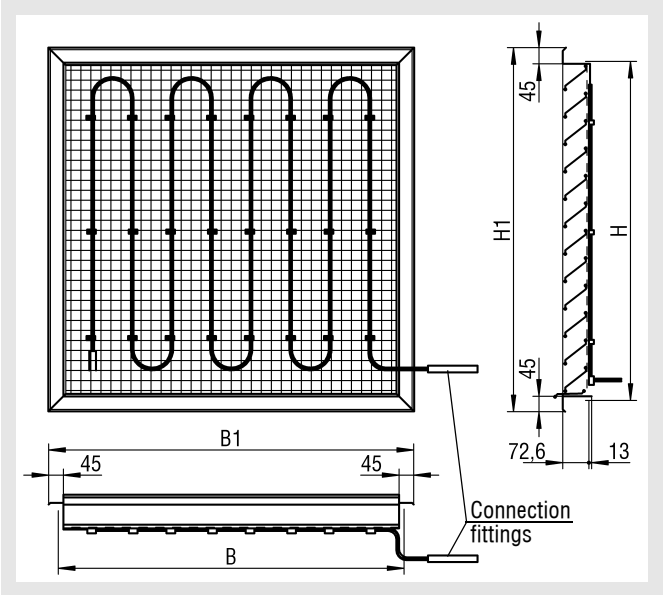

Per m² approx. 10 m of heating strip

Protective measures for ALAS with "top" heating strip

1. Protection against too high contact voltage: residual current circuit breaker, nominal fault current 30 mA (according to VDE 0100/5.73 § 13)
2. Protection against atmospheric overvoltage:
   (according to VDE 0100/5.73 § 18 and the "General Lightning Protection Regulations", ABB, Ed. 68 § 8)
   a) with surge arresters according to VDE 0675/5.72
   b) It is also advisable to connect the heating elements via a plug-and-socket device. During the season in which atmospheric disturbances (e.g. thunderstorms) occur, disconnect the system from the power. Hang the plug together with all moving connections at a distance of min. 2 m from the power supply socket.

Connecting the heating strip

a) The electrical connection must be performed by a qualified electrician taking all protective measures into consideration!
b) The following rules and regulations must be observed:
   - VDE directives
   - Regulations of the local power supply company

Technical details regarding the "top" heating strip

Structure

1. 1.4 mm² multi-strand copper conductor
2. Self-regulating, semi-conductive heating element
3. Insulation made of fluoro polymer
4. Protection mesh made of galvanised copper leads
5. Outer casing made of fluoro polymer

Temperature classification T4 in accordance with European standard EN 50014.

Technical data

Nominal voltage		230 V
Rated power		
- Air:	at 10°C	64W/m
max. resistance of protective mesh		0.01 Ω/m
max. temperature of use (permanently switched on)		+ 110 °C

Note

- The heating strip protective mesh must be connected to a protective conductor potential.
- Provide FI residual current protective device
- When used on metal, it must be included in the protective measures.
- Protective measures and protection from contact have to be ensured during installation.
- The heating strips are fitted during manufacture.

Weather Protection Grille ALAS

Technical data

Pressure loss and noise level

ALAS / ALAS-Cu / ALAS-Alu

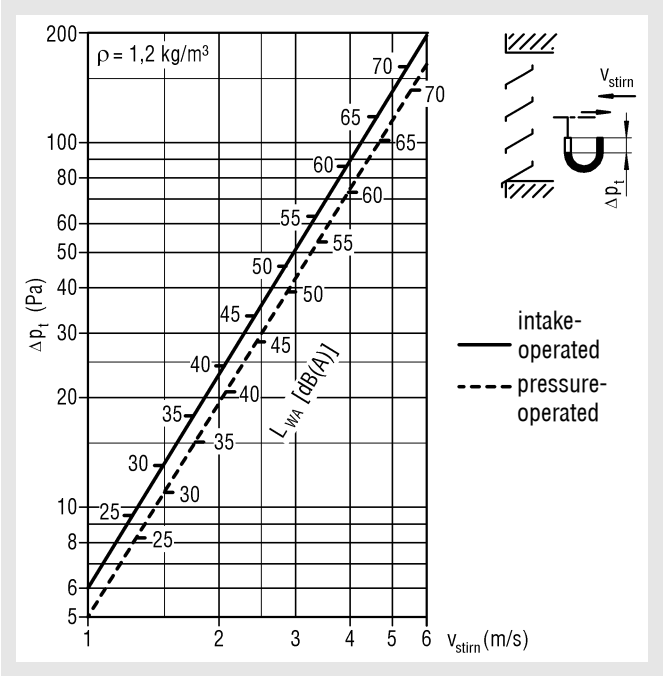

Area correction

F (m²)	0,5	1	1,5	2	2,5	3	4
KF [dB(A)]	-3	0	+2	+3	+4	+5	+6

Correction factor with insect protection wire fabric (MW=1.45 mm, D=0.5 mm) relative to 1 m²

v_{stirn} (m/s)	0,5	1,0	1,5	2,0	2,5	3,0
KF (dB(A))	+ 4	+ 6	+ 8	+ 10	+ 12	+ 14
KF (Pa)	+ 8	+ 10	+ 14	+ 18	+ 22	+ 28

Free cross-section in m²

H \ B	400	600	800	1000	1200	1400	1600	1800	2000
345	0,0578	0,0878	0,1178	0,1478	0,1778	0,2078	0,2378	0,2678	0,2978
510	0,0963	0,1463	0,1963	0,2463	0,2963	0,3463	0,3963	0,4463	0,4963
675	0,1348	0,2048	0,2748	0,3448	0,4148	0,4848	0,5548	0,6248	0,6948
840	0,1733	0,2633	0,3533	0,4433	0,5333	0,6233	0,7133	0,8033	0,8933
1005	0,2118	0,3218	0,4318	0,5418	0,6518	0,7618	0,8718	0,9818	1,0918
1170	0,2503	0,3803	0,5103	0,6403	0,7703	0,9003	1,0303	1,1603	1,2903
1335	0,2888	0,4388	0,5888	0,7388	0,8888	1,0388	1,1888	1,3388	1,4888
1500	0,3273	0,4973	0,6673	0,8373	1,0073	1,1773	1,3473	1,5173	1,6873
1665	0,3658	0,5558	0,7458	0,9358	1,1258	1,3158	1,5058	1,6958	1,8885
1830	0,4043	0,6143	0,8243	1,0343	1,2443	1,4543	1,6643	1,8743	2,0843
1995	0,4428	0,6728	0,9028	1,1328	1,3628	1,5928	1,8228	2,0528	2,2828
									FQ (m²)

Free cross-section for band design in m²

	H										
	345	510	675	840	1005	1170	1335	1500	1665	1830	1995
FQ (m²)	0,1478	0,2463	0,3448	0,4433	0,5418	0,6403	0,7388	0,8373	0,9358	1,0343	1,1328
KF (-)	0,0065	0,0108	0,0152	0,0195	0,0238	0,0280	0,0324	0,0367	0,0410	0,0454	0,0495

FQ_{band} = FQ - (KF x number of webs)

Weather Protection Grille ALAS

Circuit diagram

ALAS (with heating strip)
ALAS (with "top" heating strip)

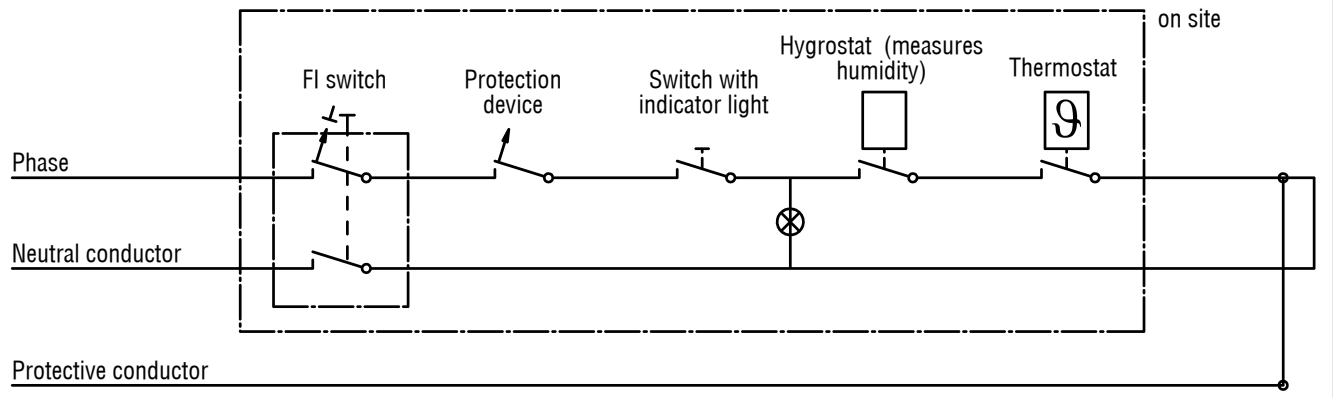

A completely wired switch cabinet is available on special request!

Legend

B	(mm)	=	Width
H	(mm)	=	Height
Δp_t	(Pa)	=	Pressure loss
L_{WA}	[dB(A)]	=	A-weighted sound power level, relative to 1 m² ($L_{WA} = (L_{WA} / m^2) + KF$)
v_{stirn}	(m/s)	=	Intake velocity, relative to (H - 80) x B
F	(m²)	=	Cross-section area, relative to (H - 80) x B
KF	(m)	=	Surface area correction factor
KF	(-)	=	Correction factor
FQ	(m²)	=	free cross-section per running metre
MW	(mm)	=	mesh width
D	(mm)	=	diameter of the mesh wire
ρ	(kg/m³)	=	density

Specification texts

External air intake or return air grille with fixed, rain-repellent blades and back-fitted wire mesh grid.

- Frame and blades from galvanised sheet steel, with galvanised wire mesh
  Product: SCHAKO **type ALAS**

- Frame and blades made of natural or anodised aluminium (E6/EV1), with wire mesh made of galvanised steel.
  Product: SCHAKO **type ALAS-Alu**

- Frame and blades made of copper, with wire mesh grille made of stainless steel 1.4301 (V2A).
  Product: SCHAKO **type ALAS-Cu**

Accessories:

- perforated mounting frame (-ER) made of primed angular steel 30/30/3 (unperforated with pre-delivery)
- self-regulating plastic heating strip
- self-regulating plastic "top" heating strip